www.comintec.it

TORQUE LIMITERS - CLUTCHES

Up to 30.000 Nm of torque and 140 mm bores

(SAFETY COUPLINGS)

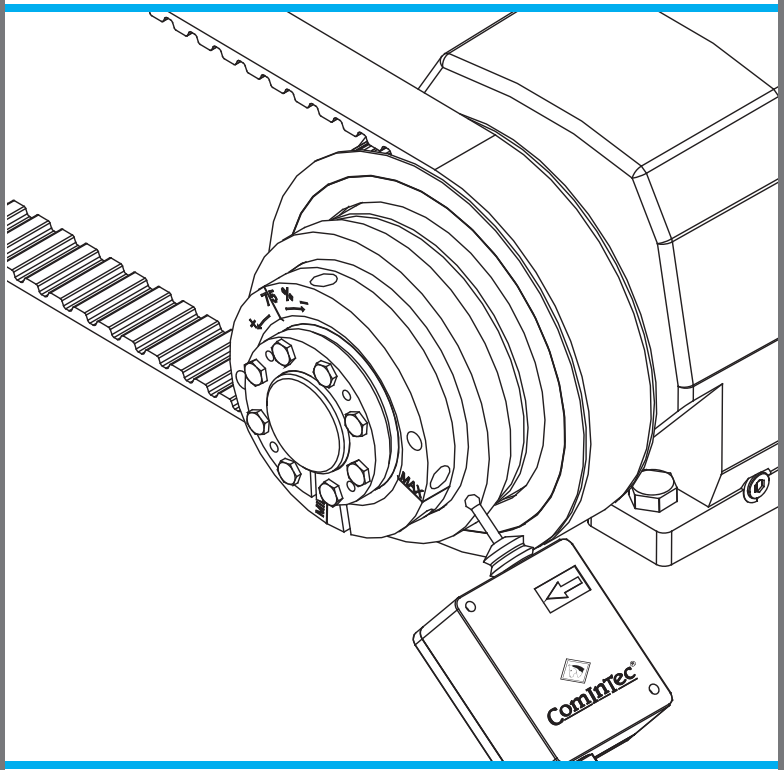

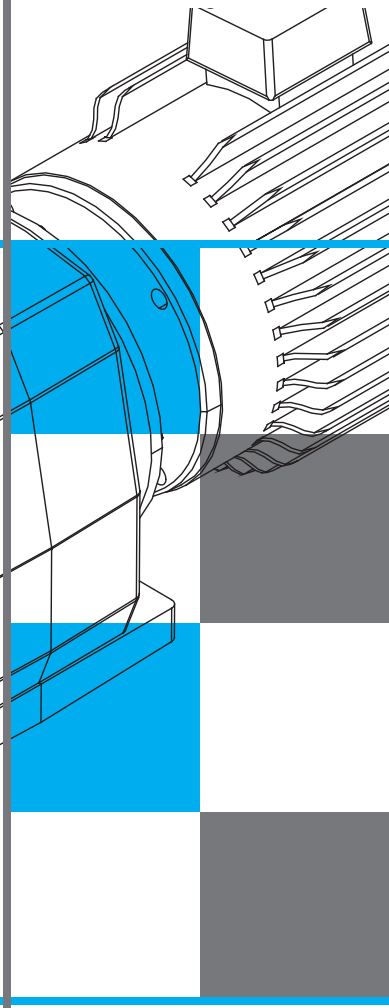

ComInTec®
Technology for Safety

Sold Exclusively in North America by:

HEXELUS

30 Wilson Drive,
Suite B
Sparta, NJ 07871
info@hexelus.com
(973) 864-4548

Edition 01/2015

TORQUE LIMITERS (SAFETY COUPLINGS) - CLUTCHES: introduction

ComInTec **torque limiters** (safety couplings) and **clutches** are mechanical components necessary to fit along the kinematic chain and are preferred to electronic safety devices because of a better response time, improved reliability, excellent configuration flexibility, easy fitting and adjustment, use at high speeds in hard environments in the presence of inertias and important masses. In fact the electronic systems, which normally act up to the transmission, present: delayed reaction time, many factors as a source of error, configuration and management complexity. The fitting of the mechanical torque limiters along the kinematic chain is therefore necessary for a reliable and complete protection, in order to improve the level of safety and the machine, according to the new EN ISO 13489-1 standards, reducing the average possible broken-down and unproductive downtime.

Benefit of our models:

- Long product life with continuous reliability.
- Optimum protection against environmental conditions.
- Simple mounting for in-line and parallel transmission.
- Easy setting and adjustment.
- Highly accurate and fast machine protection.
- Special designs to suit specific applications possible.
- Competitive pricing without sacrificing quality.
- "Made in Italy" with certified quality.

Our main product lines:

- **Friction lines:** simple, economical, with sliding function suitable for use in dry and dusty environments .
- **disengage lines:** high stability during transmission with instant disengagement and the possibility of free rotation.
- **Axial lines:** Suitable for limiting compression and tension forces on crank mechanisms.
- **Pneumatic clutch lines:** function of the clutch- disengagement with the possibility of variation of the torque during the motion.

FRICTION TORQUE LIMITER "DF"

Sliding Safety coupling where the transmission component is fitted between two friction rings and slides when the calibrated torque is reached. The minimum required to have a low cost protection.
Torque max 23000 Nm - Max bore ø140 mm.

7

ECONOMIC BALLS TORQUE LIMITER "EDF"

Safety coupling with simple and compact balls inserted directly in the drive element of transmission. The disengagement occurs quickly and safely if the calibrated torque is exceeded.
Torque max 1450 Nm - Max bore ø55 mm.

17

ROLLERS TORQUE LIMITER "DSR"

A Roller safety coupling that allows a complete disengagement when the calibrated torque is reached. Suitable for transmitting high torque with high reliability and small size.
Torque max 12000 Nm - Max bore ø120 mm.

21

BACKLASH FREE TORQUE LIMITER "DSS/SG"

Ball safety coupling with high technology and backlash free transmission. Device with high sensitivity of intervention, instant and precise disconnection.
Torque max 1200 Nm - Max bore ø65 mm.

31

FREE ROTATION TORQUE LIMITER "DSS/SG/RF"

Backlash free Safety coupling suitable for high speeds, with free rotation without residual torque after disengagement that occurs precisely and immediately. The re-engagement is manual.
Torque max 1200 Nm - Max bore ø65 mm.

43

MODULAR TORQUE LIMITER "DSM"

Modular Safety coupling, robust, suitable for "heavy industries" even at high speeds. After disconnection there is free rotation without residual torque, re-engagement is simple and manual.
Torque max 9000 Nm - Max bore ø140 mm.

49

TORQUE LIMITER FOR REDUCERS "PR"

Safety coupling to be mounted between the motor and gear unit thus reducing significantly the size of the device at the same power output. Available in both slip release versions.
Torque max 2600 Nm - Max bore ø55 mm.

55

AXIAL FORCE LIMITER "DSA"

Safety coupling with linear limitation of force. The axial disengagement can take place in both compression and tension once the calibrated force is reached, the re-engagement is automatic.
Force max 4700 N - Max shaft ø20 mm.

61

PNEUMATIC CLUTCHES "AP"

Clutch or roller with torque control during motion and low residual torque after disengagement. Ability to disconnect the driven portion from the driving through pneumatic control.
Torque max 30000 Nm - Max bore ø120 mm.

65

SELECTION GUIDE

TECHNICAL CHARACTERISTICS	DF page 7	EDF page 17	DSR page 21	DSS/SG page 31	DSS/SG/RF page 43	DSM page 49	PR page 55	DSA page 61	AP page 65
Manufactured in turned steel	■	■	■	■	■	■	■	■	■
Anticorrosive treatment std. phosphate	■	■	■	■	■	■	■	■	■
Compact size	■	■		■	■	■	■		
High torque possible			■			■			■
Maintenance-free		■	■	■	■	■	■	■	
High torsional stiffness				■	■				
Modular system						■			
Reduced inertia				■	■		■		
Noise during transmission	■								
Suitable for high speeds				■	■	■	■		■
Suitable for dusty environments	■								
Suitable for wet and oily		■	■	■	■	■	■	■	
Assembly with **flexible couplings - rigid coupling** possible	■	■	■	■	■	■	■		■
ADVANTAGES AND BENEFITS									
Protect the gear motor from jamming due to foreign bodies	■	■	■	■		■	■		■
Absorb starting torques without disconnecting the transmission	■								
Protect the film of the packaging in case of excessive traction	■								■
Protect slides or servomotors from impact or limit		■		■			■	■	
Keep the phases between the driving and driven after an overload			■	■					
Protect the final product from crushing or deformation	■	■	■	■		■	■	■	■
Protect indexers overload long transmission				■					
Where it is necessary to complete the transmission disconnect					■	■			■
Best simplicity and sensitivity compared to integrated solutions in gear box	■			■			■		
Protect the operating units of the machine tool from collisions				■					
Protecting mechanical devices during transmission at high speeds of rotation					■	■			
Engage / disengage different lines of transmission of the product									■
Greater durability of all the devices, thanks to the free rotation					■	■			
Protect axial movers within the transmission from overload								■	
APPLICATIONS									
Conveyors	■	■	■	■			■		
Extruders and laminators					■	■			
Heavy Industry	■		■			■			
Packaging machinery and equipment			■	■			■		
Labelling				■					
Conveyors		■	■						
Machine tools and CNC				■					
Servo motors and linear guides				■					
Machines with cycle variable torque									■
Agricultural machinery and earthmoving	■		■						
Winding and unwinding of coils									■
Test benches					■				■
Automotive	■			■					
Handling and eccentric cams								■	

Type A — Plain bored H7 hub with set screw.

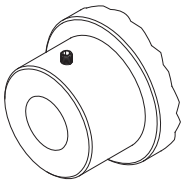

An economic and quick solution for low torque.

Type A1 — H7 bore with keyway and set screw.

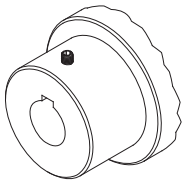

Standard solution on the hubs shown in the catalogue for horizontal assembling.

Type A2 — Splined bore with set screw.

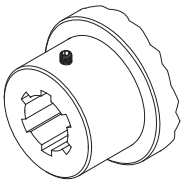

Recommended solution in the case of hard transmission.

Type B — Single split clamp hub with plain H7 bore.

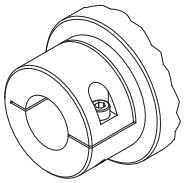

Reduction of angular backlash without change to the overall dimensions.

Type B1 — Single split clamp hub with H7 bore and keyway.

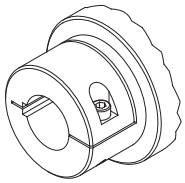

Reduction of angular backlash, during reversing drives, and high torques.

Type B2 — Single split clamp hub with splined bore.

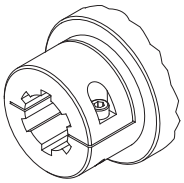

Reduction of angular backlash in the case of hard transmission.

Type C — Two piece clamp hub with plain H7 bore.

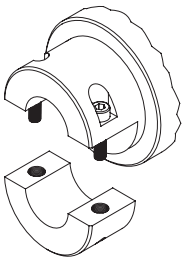

Reduction of angular backlash, and simple radial assembly/disassembly.

Type C1 — Two piece clamp hub with H7 bore and keyway.

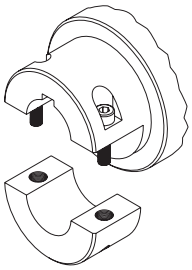

Simple assembly and reduction angular backlash, even with high torque.

Type G — Clamp connection with internal Taper Bush.

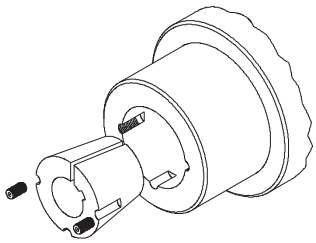

Flexibility of fitting for conical bushing without angular backlash.

Type D — Clamp connection with integrated locking assembly.

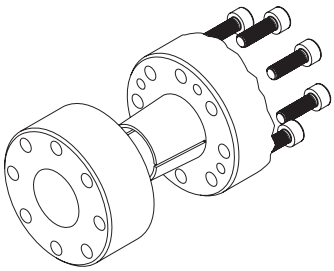

Suitable for high speeds without change to standard dimensions **(.../CCE version)**.

Type E — Clamp connection with internal locking assembly.

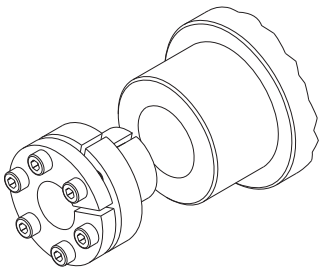

Reduction of angular backlash and reduced radial dimensions.

Type F — Clamp connection with external locking assembly.

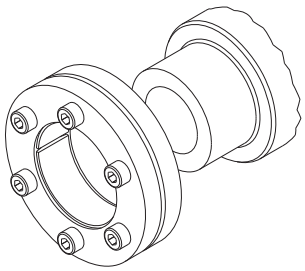

Fast and economic solution to transmit low torque.

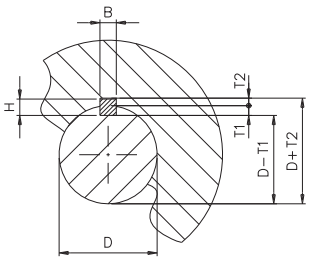

Bore and Keyways according to UNI 6604 (DIN 6885-1)

D	>10 12	>12 17	<17 22	>22 30	>30 38	>38 44	>44 50	>50 58	>58 65	>65 75	>75 85	>85 95	>95 110	>110 130	>130 150	>150 170	>170 200
B H9	4	5	6	8	10	12	14	16	18	20	22	25	28	32	36	40	45
H	4	5	6	7	8	8	9	10	11	12	14	14	16	18	20	22	25
T1	2,5	3	3,5	4	5	5	5,5	6	7	7,5	9	9	10	11	12	13	15
T2	1,8	2,3	2,8	3,3	3,3	3,3	3,8	4,3	4,4	4,9	5,4	5,4	6,4	7,4	8,4	9,4	10,4
	+0,1 0			+0,2 0											+0,3 0		

TORQUE LIMITERS (SAFETY COUPLINGS) - CLUTCHES: hub connection type on couplings application

HUB CONNECTIONS	DF			EDF/F	DSR			DSS/SG			DSS/SG/RF	DSM		AP
	.../TAC page 11	+GAS page 12	+GEC page 12	.../TAC page 20	+GTR page 27	+GAS page 27	+GEC page 28	+GAS/SG/ CCE page 38	+GAS/SG page 39	+GSF page 40	+GAS/SG page 47	+GAS page 52	+GTR page 52	+GEC page 68
Pilot bore	●	●	●	●	●	●	●	●	×	○	●	●	●	●
Type A	▲	▲	▲	▲	▲	▲	▲	▲	×	×	▲	▲	▲	▲
Type A1	●	●	●	●	●	●	●	●	×	×	●	●	●	○
Type A2	▲	▲	▲	▲	▲	▲	▲	▲	×	×	▲	▲	▲	▲
Type B	▲	○	▲	▲	○	○	▲	○	×	●	○	×	×	▲
Type B1	▲	▲	▲	▲	▲	▲	▲	▲	×	▲	▲	×	×	▲
Type B2	▲	▲	▲	▲	▲	▲	▲	▲	×	×	▲	×	×	▲
Type C	▲	▲	▲	▲	▲	▲	▲	▲	×	×	▲	×	×	▲
Type C1	▲	▲	▲	▲	▲	▲	▲	▲	×	×	▲	×	×	▲
Type G	▲	▲	▲	▲	▲	▲	▲	▲	×	×	▲	▲	▲	▲
Type D	×	×	×	×	▲	×	×	●	●	×	×	×	●	●
Type E	▲	▲	▲	▲	▲	▲	▲	▲	×	×	▲	▲	▲	▲
Type F	▲	▲	▲	▲	▲	▲	▲	▲	×	×	▲	▲	▲	▲

Symbol	Description	Notes
●	Standard supply	• All types of hub connections are carried out only on the finished bore. • For the supply or feasibility of other types of hub locking and combinations please contact our technical department.
○	Optional standard supply	
▲	Supplied on request	
×	Not supplied	

TORQUE LIMITERS (SAFETY COUPLINGS) - CLUTCHES: selection and assembly

SUMMARY CHARACTERISTICS

Model	Function	Torque	Max bore	Speed	Main characteristics	Sensitivity
DF	friction	1 ÷ 23000	140	medium - low	economic solution	medium - low
EDF/F	mechanical	7,5 ÷ 1450	55	medium - low	compact solution with balls in phase	medium - high
DSR	mechanical	10 ÷ 12000	120	medium - low	with rollers in phase or equidistant	medium - high
DSS/SG	mechanical	0,8 ÷ 1200	50	medium - high	backlash free with balls in phase or equidistant	high
DSR/SG/RF	mechanical	10 ÷ 1200	65	medium - high	backlash free rotation	medium - high
DSM	mechanical	200 ÷ 9000	140	high	free rotation for high speed	medium - high
DSS/F/SG/PR-V	mechanical	3 ÷ 720	48	medium - high	compact solution for gearbox	medium - high
DF/TAC/PR-V	friction	1 ÷ 2600	55	medium - low	economic and compact solution for gearbox	medium - low
DSA	mechanical	30 ÷ 4700 N	-	medium	axial limitation	medium - high
DSR/F/AP	pneumatic	7 ÷ 30000	120	high	mechanical roller clutch	high
DSF/TF/AP	pneumatic	3 ÷ 875	65	medium - high	friction clutch	medium

ASSEMBLY EXAMPLES

FRICTION TORQUE LIMITERS

Transmission with parallel shafts

Transmission with in-line shafts

BALLS OR ROLLERS TORQUE LIMITERS

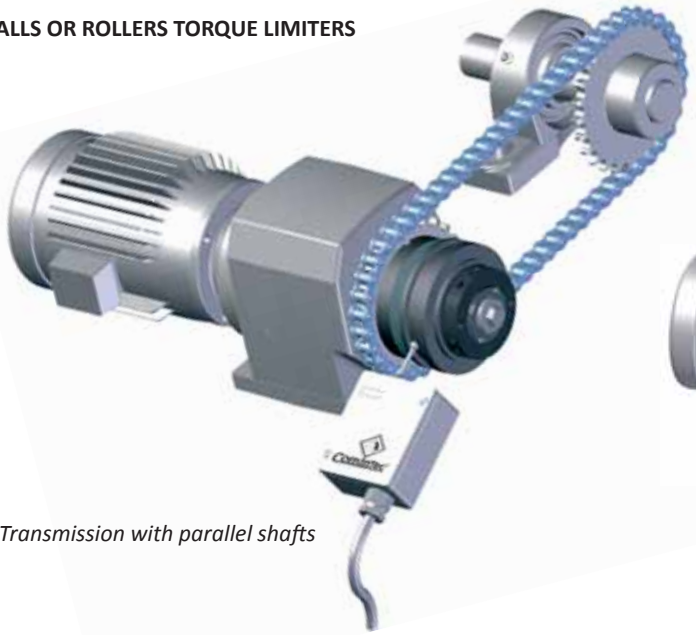

Transmission with parallel shafts

Transmission with in-line shafts

FRICTION TORQUE LIMITER

(SAFETY COUPLINGS)

Up to 23.000 Nm of torque and 140 mm bore

DF

ComInTec®
Technology for Safety

HEXELUS

DF - friction torque limiter: introduction

- Simple and economic friction torque limiter.
- Suitable for dusty conditions without need of timing between gearbox and output.
- Silent overload without vibration.
- Protection in both rotation directions.
- Asbestos-free friction discs.
- Simple and precise torque setting by adjusting the locking ring.
- Innovative calibration system by “H dimension“ for an immediate calibration of the device.

ON REQUEST

- Complete with transmission gear, fully turned and mounted (plate wheel, pulley, gear pair).
- Different types of friction discs for specific applications.
- Possibility of connections with bore and keyway, locking assembly or other locking systems.
- Anti-corrosive surface treatments for special requirements.

Sliding safety coupling where a plate wheel, pulley or other transmission component is interposed between two friction rings. Upon reaching the torque sliding ensures continuity in the transmission without damaging the components. The minimum to have a low cost protection.

MAIN APPLICATIONS

- Forming machines.
- Conveyors.
- Automotive.
- Agricultural machines, woodworking machines.

ADVANTAGES AND BENEFITS

- Protects the motor-gearbox in case of accidental collision.
- Protects the film of wrapping machines in case of higher tension.
- Absorbs static torques without disengaging.
- Protects the gear in case of short product jam.

FRICTION RINGS

- STD (standard): friction rings used for the torque values indicated in the catalogue. Optimum performance ratio torque / life.
- ▲ LD (long life): same performance in torque respect std friction rings life greater than 5 times.
- ▲ LDX (extra long life): life greater than 150 times respect standard friction rings, but performance in torque reduced by of 70%.

▲ On request

	DF: Basic model for parallel shaft transmission, with plate wheels, gear pairs or pulleys.	From 1 to 23000 Nm 140 mm max bore	Page 9
	DF/SI: signaling on overload and automatic re-engaging possible.	From 3 to 23000 Nm 140 mm max bore	Page 10
	DF/TAC: in-line shaft connection, simple and economic.	From 1 to 23000 Nm 160 mm max bore	Page 11
	... + GAS: in-lineshaft connection with elastic coupling with high misalignments.	From 1 to 9600 Nm 125 mm max bore	Page 12
	... + GEC: in-line shaft connection with compact elastic coupling.	From 1 to 23000 Nm 160 mm max bore	Page 12

APPLICATION EXAMPLES

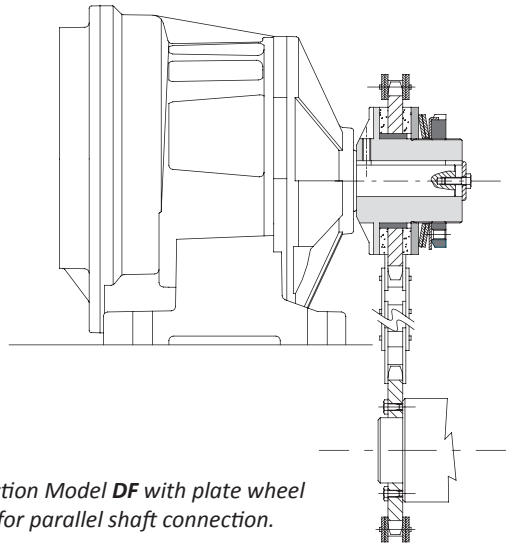

*Friction Model **DF** with plate wheel for parallel shaft connection.*

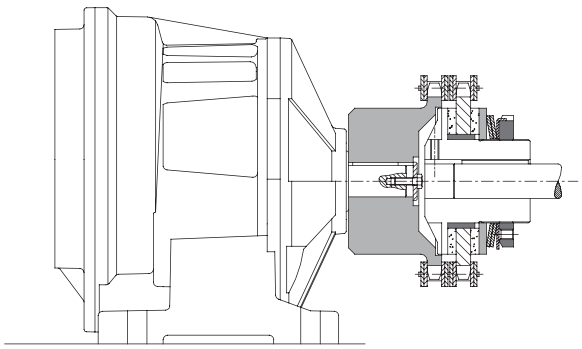

*Friction Model with chain coupling **DF/TAC** for in-line shafts connection.*

- Simple and compact solution.
- Version with coil springs for fine adjustment: .../CM.
- Available in corrosion resistant: DF/EA.
- Available with customized alignments ("L") interchangeable with other models on the market.
- Available with radial ring statically balanced: .../GR.
- Torque range from 1 to 23.000 Nm; max. bore ø140 mm.

DF

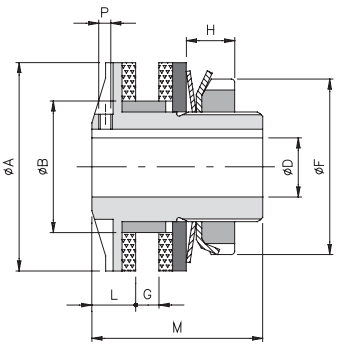

.../ML
(long-hub version)

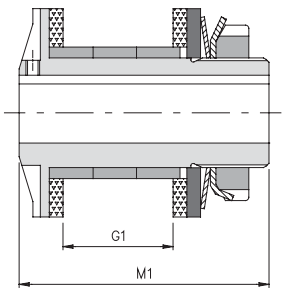

00.25 - 5.170

DF

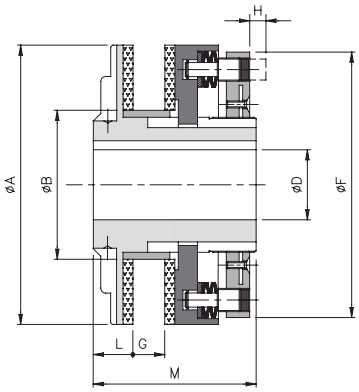

.../ML (long-hub version)

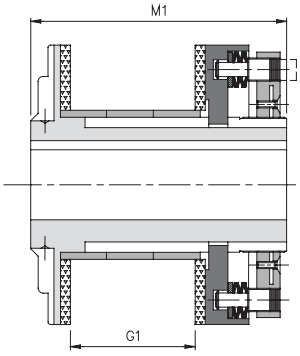

6.205 - 10.400

DIMENSIONS

Size	A	B h7	D H7		F	G		G1	L	M	M1	P *
			pilot bore	max		min	max	max				
00.25	25	14	-	8	22	1	3	-	5	26	-	M3*
00.38	38	24	-	12	32	1	5	21	8	33	46	M3
0.50	50	36	-	20	44	1	6	26	10	35	57,5	M4
1.70	70	45	-	25	63	1	10	40	15	55	85	M6
2.90	90	60	-	38	82	3	12	46	16	60	95	M6
3.115	115	72	18	45	104	5	16	58	18	70	113	M6
4.140	140	85	24	55	130	8	19	69	20	80	136	M8
5.170	170	98	28	65	158	10	22	78	22,5	95	153,5	M8
6.205	205	120	38	80	193	18	26	90	27	110	174	-
7.240	240	145	50	100	230	18	29	99	27	116	186	-
▲ **8.300**	300	175	60	120	287	21	33	113	29	123	203	-
▲ **9.340**	340	205	60	130	325	23	33	113	41	158	238	-
▲ **10.400**	400	230	60	140	388	23	35	119	46	167	251	-

TECHNICAL DETAILS

Size	Torque *[Nm]*				Inertia *[10^{-3} kgm²]*	Max. speed *[Rpm]*	Weight *[Kg]*	
	T0	T1	T2	T3			DF	.../ML
00.25	-	1 - 8	2 - 12	2 - 20	0,003	10000	0,1	-
00.38	-	1 - 14	8 - 22	15 - 34	0,022	10000	0,2	0,3
0.50	2 - 12	4 - 40	17 - 70	23 - 100	0,075	7600	0,4	0,5
1.70	6 - 18	17 - 60	34 - 120	60 - 210	0,390	5450	1,1	1,4
2.90	13 - 105	74 - 140	90 - 280	185 - 450	1,167	4250	2,2	2,8
3.115	65 - 280	120 - 360	207 - 700	210 - 950	3,809	3350	3,7	4,8
4.140	-	180 - 550	260 - 950	390 - 1200	9,982	2750	6,6	8,5
5.170	-	160 - 700	300 - 1450	1000 - 2600	23,943	2250	10,9	13,5
6.205	300 - 1200	500 - 2400	1000 - 4800	-	75,088	1900	20,1	24,5
7.240	500 - 2000	1000 - 4000	2000 - 8000	-	152,946	1600	30,9	37,8
▲ **8.300**	800 - 3500	1500 - 7000	3000 - 14000	-	380,357	1300	49,1	60,8
▲ **9.340**	1000 - 4500	2000 - 9000	4000 - 18000	-	869,290	1200	85,5	102,5
▲ **10.400**	1500 - 5000	3000 - 11000	5000 - 23000	-	1830,092	1000	124,5	147,7

▲ On request

NOTES

- P *: On the size 00.25 the grubscrew is located on the nut side, not on the flange side.
- Weights are relevant to the torque limiter with pilot bore (DF), inertias refer to the maximum diameter for finished bore.

.../SI - intervention signaling version: technical data

- Electromechanical overload signaling.
- Automatic re-engaging after transmission reset.
- Assembly with helical springs possible: .../SI/CM.
- Available with a longer shaft for assembly with transmission elements of large size: .../SI/ML.
- Available with friction rings with different performances for specific needs.
- Torque range: 3 – 23.000 Nm; max. bore: ø140 mm.

.../SI

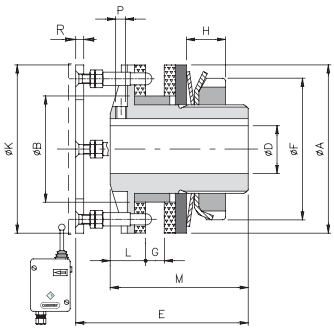

.../SI/ML
(long-hub version)

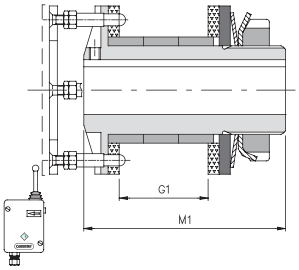

1.70 - 5.170

.../SI

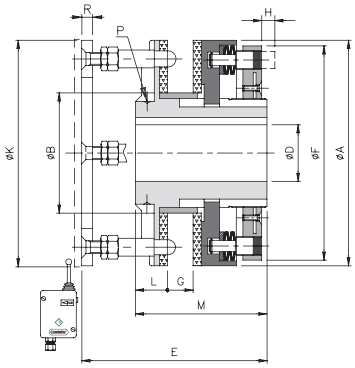

.../SI/ML
(long-hub version)

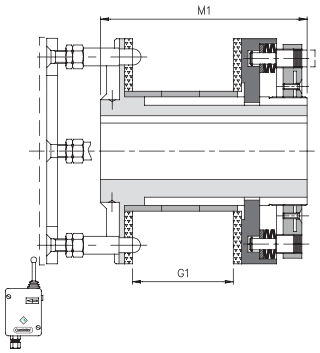

6.205 - 10.400

DIMENSIONS

Size	A	B h7	D H7		E	E1	F	G		G1	K	L	M	M1	R
			pilot bore	max				min	max	max					
1.70	70	45	-	25	75	105	63	5	10	40	70	15	55	85	3
2.90	90	60	-	38	80	114	82	7	12	46	90	16	60	95	3
3.115	115	72	18	45	89	131	104	9	16	58	115	18	70	113	4
4.140	140	85	24	55	103	153	130	13	19	69	140	20	80	136	4
5.170	170	98	28	65	116	172	158	15	22	78	170	22,5	95	153,5	4
6.205	205	120	38	80	125	189	193	18	26	90	205	27	110	174	4
7.240	240	145	50	100	131	201	230	18	29	99	240	27	116	186	6
▲ **8.300**	300	175	60	120	136	216	287	21	33	113	300	29	123	203	6
▲ **9.340**	340	205	60	130	172	252	325	23	33	113	340	41	158	238	6
▲ **10.400**	400	230	60	140	176	260	388	23	35	119	400	46	167	251	6

TECHNICAL DETAILS

Size	Torque *[Nm]*				Inertia *[10^{-3} kgm²]*	Max speed *[Rpm]*	Weight *[Kg]*	
	T0	T1	T2	T3			DF/SI	.../ML
1.70	6 - 18	17 - 60	34 - 120	60 - 210	0,393	5450	1,4	1,7
2.90	13 - 105	74 - 140	90 - 280	185 - 450	1,178	4250	2,7	3,3
3.115	65 - 280	120 - 360	207 - 700	210 - 950	3,847	3350	4,9	6
4.140	-	180 - 550	260 - 950	390 - 1200	10,081	2750	7,8	9,7
5.170	-	160 - 700	300 - 1450	1000 - 2600	24,182	2250	12,9	15,5
6.205	300 - 1200	500 - 2400	1000 - 4800	-	75,834	1900	20,9	25,2
7.240	500 - 2000	1000 - 4000	2000 - 8000	-	154,475	1600	32,2	39,1
▲ **8.300**	800 - 3500	1500 - 7000	3000 - 14000	-	384,161	1300	50,6	62,3
▲ **9.340**	1000 - 4500	2000 - 9000	4000 - 18000	-	877,882	1200	88	105
▲ **10.400**	1500 - 5000	3000 - 11000	5000 - 23000	-	1848,432	1000	128,8	152

NOTES

▲ On request

- Weights are relevant to the torque limiter with pilot bore (DF/SI), inertias refer to the torque limiter (DF) hole max.
- Microswitches EM1 or EM2 and inductive sensor PRX see page 73

ComInTec®
HEXELUS

.../TAC - version with chain coupling: technical data

- Simple and compact solution for transmission with in-line shafts.
- Protection in both rotation directions.
- Possibility of different types of friction discs for specific applications.
- Version with coil springs for pairs and fine adjustment of the couple: .../CM/TAC.
- Available with radial ring statically balanced: .../GR.
- Torque range from 1 to 23.000 Nm; max. bore ø160 mm.

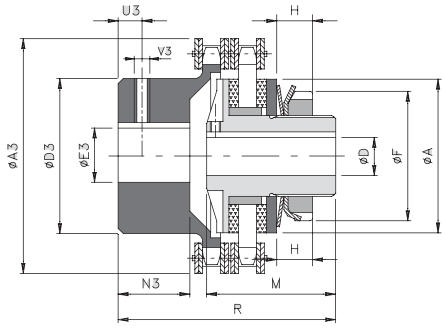

00.25 - 5.170

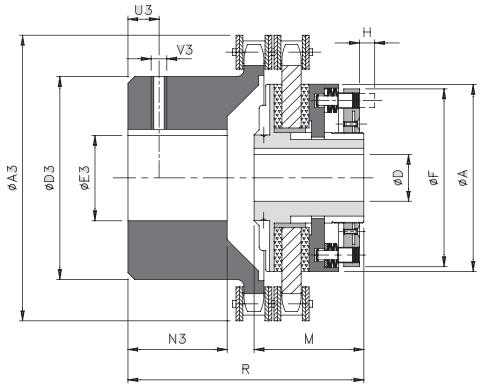

6.205 - 10.400

DIMENSIONS

Size	A	D H7		F	M	R	A3	D3	E3 H7		N3	U3	V3
		pilot bore	max						pilot bore	max			
00.25	25	-	8	22	26	39	45	23	8	12	9	4	M3
00.38	38	-	12	32	33	58	57	37	10	20	20	5	M3
0.50	50	-	20	44	35	58	75	50	12	28	19	8	M4
1.70	70	-	25	63	55	87	101	70	16	38	29	12	M6
2.90	90	-	38	82	60	102	126	89	20	55	38	12	M6
3.115	115	18	45	104	70	131	159	112	20	70	56,5	15	M8
4.140	140	24	55	130	80	145	184	130	28	80	59,5	15	M8
5.170	170	28	65	158	95	189	215	130	30	80	88	15	M8
6.205	205	38	80	193	110	218	291	150	38	90	103	25	M10
7.240	240	50	100	230	116	245	310	170	50	110	124	25	M10
▲ **8.300**	300	60	120	287	123	284	374	200	50	140	147	30	M12
▲ **9.340**	340	60	130	325	158	329	423	210	60	150	165	30	M12
▲ **10.400**	400	60	140	388	167	364	471	240	60	160	191	30	M16

TECHNICAL DETAILS

Size	Torque *[Nm]*				Misalignment			Max speed *[Rpm]*	Weight *[Kg]*
	T0	T1	T2	T3	Angular α *[°]*	Axial *X [mm]*	Radial *K [mm]*		
00.25	-	1 - 8	2 - 12	2 - 20		1,50	0,20	5000	0,2
00.38	-	1 - 14	8 - 22	15 - 34		1,50	0,20	5000	0,6
0.50	2 - 12	4 - 40	17 - 70	23 - 100		1,50	0,20	3800	1,1
1.70	6 - 18	17 - 60	34 - 120	60 - 210		2,40	0,25	2800	2,8
2.90	13 - 105	74 - 140	90 - 280	185 - 450		3,20	0,30	2200	5,9
3.115	65 - 280	120 - 360	207 - 700	210 - 950		4,50	0,35	1800	11,1
4.140	-	180 - 550	260 - 950	390 - 1200	2°	4,80	0,40	1500	20,3
5.170	-	160 - 700	300 - 1450	1000 - 2600		4,80	0,40	1300	31
6.205	300 - 1200	500 - 2400	1000 - 4800	-		6,30	0,50	1000	54,6
7.240	500 - 2000	1000 - 4000	2000 - 8000	-		6,30	0,50	900	76,7
▲ **8.300**	800 - 3500	1500 - 7000	3000 - 14000	-		6,80	0,55	700	125,5
▲ **9.340**	1000 - 4500	2000 - 9000	4000 - 18000	-		6,80	0,55	600	180
▲ **10.400**	1500 - 5000	3000 - 11000	5000 - 23000	-		6,80	0,55	550	260

▲ On request

NOTES

- Data is relevant to the whole group (DF/TAC).
- Weights are relevant to the whole group with pilot bore (DF/TAC).

HEXELUS
ComInTec®

... + GAS - model with jaw coupling: technical data

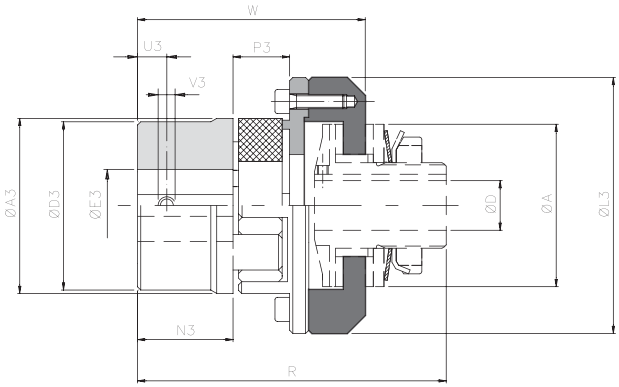

DIMENSIONS AND TECHNICAL DETAILS

Size			Torque [Nm]		A3	E3 H7 max	L3	N3	P3	U3	V3	D H7		R	W	Misalignments *			Max speed [Rpm]	Weight [Kg]
DF	GAS		Nom	Max								pilot bore	max			Angular α [°]	Axial X [mm]	Radial K [mm]		
	Std	▲ Min																		
00.25	01 (14)	-	12,5	25	30	16	43	11	12	5	M4	-	8	56	37,5	0° 54'	1	0,09	10000	0,2
00.38	00 (19)	-	17	34	40	25	58	25	16	10	M5	-	12	84,5	64	1° 18'	1	0,20	10000	0,4
0.50	0 (24)	-	60	120	55	35	74	30	18	10	M5	-	20	94	74,5	1° 18'	1	0,22	7600	0,8
1.70	2 (38)	1 (28)	325	650	80	48	107	45	24	15	M8	-	25	135	104	1° 18'	1,4	0,28	5450	3,3
2.90	3 (42)	2 (38)	450	900	95	55	132	50	26	20	M8	-	38	148,5	115,5	1° 18'	1,6	0,32	4250	5,4
3.115	5 (55)	4 (48)	685	1370	120	74	164	65	30	20	M10	18	45	181,5	143,5	1° 18'	1,8	0,38	3350	10,3
4.140	7 (75)	6 (65)	1465	2930	160	95	208	85	40	25	M10	24	55	224	181	1° 18'	2,5	0,48	2750	21,1
5.170	8 (90)	7 (75)	3600	7200	200	110	246	100	45	30	M12	28	65	260	207,5	1° 18'	2,8	0,50	2250	36,3
▲ **6.205**	9 (100)	-	3300	6600	225	115	285	110	50	30	M12	38	80	295	236	1° 18'	3,0	0,52	1900	-
▲ **7.240**	10 (110)	-	4800	9600	255	125	330	120	55	33	M16	50	100	317	255	1° 18'	3,2	0,55	1600	-

... + GEC - model with compact elastic coupling: technical data

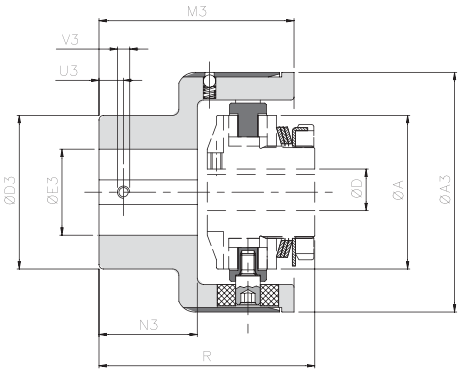

DIMENSIONS AND TECHNICAL DETAILS

Size		Torque [Nm]		A3	D3	E3 H7		M3	N3	U3	V3	A	D H7		R	Misalignments			Max speed [Rpm]	Weight [Kg]
DF	GEC	Nom	Max			Grz	Max						pilot bore	max		Angular α [°]	Axial X [mm]	Radial K [mm]		
00.38	00	35	50	63	42	5	20	60,5	29	8	M4	25	-	12	58	1°	± 0,7	0,5	6000	0,8
0.50	0	70	110	78	50	10	28	63,5	32	10	M5	50	-	20	68	1°	± 0,7	0,5	5500	1,4
1.70	1	280	420	108	70	12	38	89	49	12	M6	70	-	25	106	0° 48'	± 0,7	0,5	5000	4,2
2.90	2	570	860	130	80	15	45	111	65	15	M8	90	-	38	128	0° 36'	± 0,7	0,6	4250	7,4
3.115	3	980	1500	161	100	15	60	140	85	15	M8	115	18	45	158	0° 30'	± 0,8	0,6	3350	13,4
4.140	4	2340	3600	206	120	20	70	168	105	20	M10	140	24	55	189,5	0° 24'	± 0,8	0,6	2750	24,1
5.170	5	3880	5800	239	135	30	80	201	130	20	M10	170	28	65	229,5	0° 24'	± 0,8	0,6	2250	37,9
▲ **6.205**	6	15000	20000	315	215	40	150	260	165	25	M12	205	38	80	290,5	0° 24'	± 0,8	0,6	1900	86,8
▲ **7.240**	7	30000	35000	360	240	40	160	310	205	25	M12	240	50	100	341,5	0° 24'	± 0,8	0,6	1500	160,5

NOTES

▲ On request

- ... + GAS (misalignments)*: data relates to red elastomeric element 98Sh-A.
- Data is relevant only to application (.../GAS - .../GEC), for torque limiter data see on page 9
- Weights are relevant only to the coupling application with pilot bore version (.../GAS - .../GEC).

OTHER COUPLING ON REQUEST

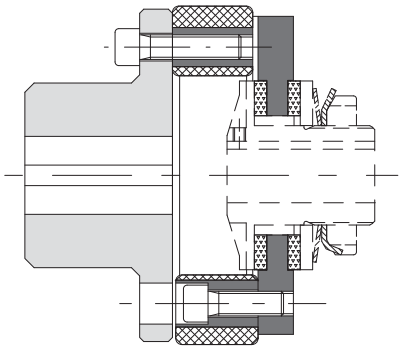

*Model **DF** suitable for connections **GF** to coaxial shafts capable of recovering high misalignments.*

VERSIONS ON REQUEST

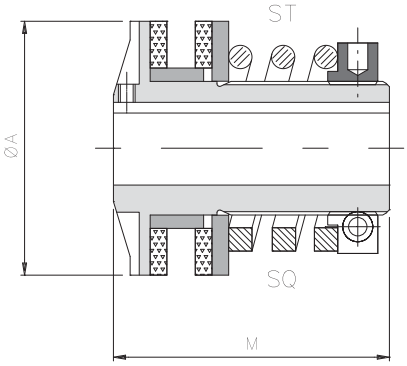

.../CM: minimum torque version

Helical springs execution, for a wider torque range and consequently a finer adjustment on calibration is possible.

Size	Torque *[Nm]*		A	M1
	spring ST	spring SQ		
0.50	1,5 - 9	-	50	57,5
1.70	2 - 34	2 - 60	70	85
2.90	5 - 56	3 - 70	90	95
3.115	10 - 130	25 - 160	115	113

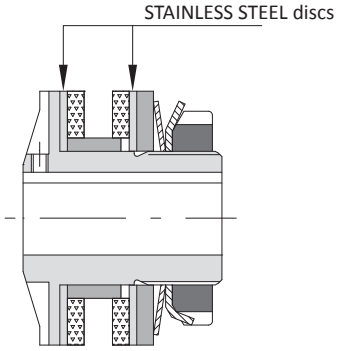

.../EA: rust resistant

Rust resistant execution, with stainless steel rings, galvanized for application in wet environments.

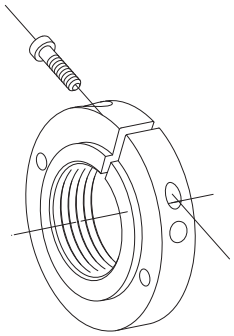

.../GR: model with radial ring

Ring with radial locking statically balanced alternative to the grooved nut GT standard. Available from size 00.38 to 5.170.

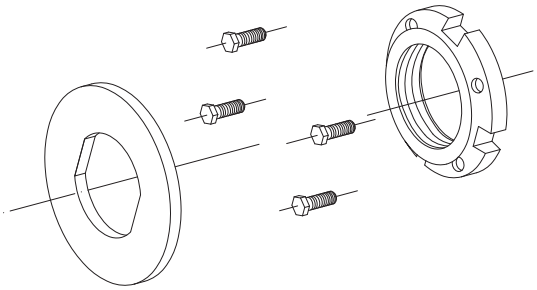

GT/DR KIT: kit for double registration matching to the nut with notches GT

Torque adjustment system with double registration (with flange and hex head screws) for high sensitivity and precision calibration, also with belleville washers.

DF - friction torque limiter: additional information

PLATE WHEELS

The driving part selected (plate wheels, pulleys, gears, and so on) to be incorporated into the friction torque limiter, must adhere to predetermined characteristics (ex. the surface in contact to the friction rings with roughness Ra=0,8 : 1,6) to ensure good performance.In the table below, there are standard plate wheels in ComInTec's production (supplied already grounded) which can be assembled on the torque limiter; **and the minimum chain passage"V"(see picture 3)**, necessary for the correct sizing of the plate wheel to avoid contact between the chain and outside diameter of the limiter. It is possible to assemble various types of plate wheels, but the surfaces must be machined, and the chain passage cannot be smaller than this value. Another aspect to take into consideration to ensure the dimension of the assembly is correct, is the element thickness and its relevant bush "N" (see picture 1). We suggest to obtain a quote "N" equal to [S + G + 1]. Comparing "N" value obtained, to the Nstd indicated on the table, which corresponds to the standard length of the bushes, you can have: "N"<"N"(picture 1 - ex.A) ⟶ reduce the bush width to quote"N".
"N" > "N_{std}" (picture 2 - ex.B) ⟶ machine the driving part at a diameter of "A+1" and a depth equal to "x" (N - N_{std}).

Example "A" (see picture 1)
1.70 with plate wheel #7
G = 7 mm
S = 4 mm
N = S+G+1 = 4 + 7 + 1 = 12
N_{std} = 15
Reduce the bush width to 12 mm.

Example "B" (see picture 2)
1.70 with plate wheel #13
G = 13 mm
S = 4 mm
N = S+G+1 = 4 + 13 + 1 = 12
N_{std} = 15
Machine ø71 with depth (value "x" = 18-15 = 3)

where:

- p = pitch [in]
- G = thickness of the ground element
- z = teeth number
- dp = pitch diameter
- S = thickness of the friction ring
- N_{std} = thickness of the standard bush
- N = thickness of the calculated bush (S+G+1)
- A = outside diameter of the torque limiter
- V = inside diameter of the chain
- x = depth of the machining (N - N_{std})

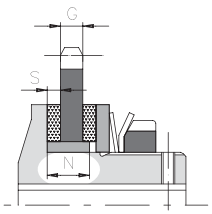

fig. 1

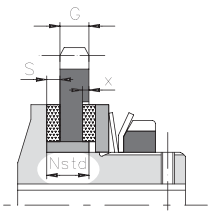

fig. 2

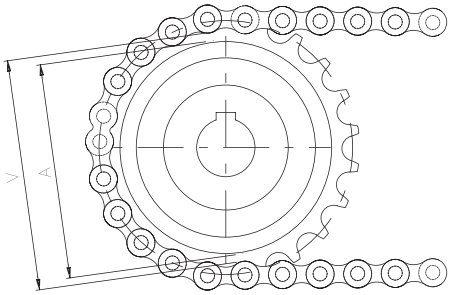

fig. 3

Size	P [in]	G [mm]	z	dp [mm]	S [mm]	N_{std} [mm]	A [mm]	V [mm]	Code for single plate wheel		
									DF & DSF/TF/AP	DF/SI & DSF/TF/AP/SI	EDF/F
00.25	3/8"	5,1	12	36,80	2	5,5	25	28	580419851P05	-	-
00.38	3/8"	5,1	16	48,82	2,5	8	38	41	580406900P05	-	580406951P05
0.50	3/8"	5,1	20	60,89	3	10	50	53	580406400P05	-	580406451P05
		5,1	22	66,93					580406500P05	-	580406551P05
1.70	1/2" x 5/16"	7,0	22	89,24	4	15	70	73	580403700P05	580407700P20	580403751P05
	5/8"	8,9	19	96,45					580404200P05	-	-
2.90	1/2" x 5/16"	7,0	26	105,36	4	17	90	94	580404700P05	-	-
	3/4"	10,9	18	109,71					580440100P05	580442100P20	580440151P05
3.115	3/4"	10,9	23	139,9	4	21	115	119	580404900P05	-	-
	1"	16,0	17	138,22					580440200P05	580442200P20	580440200P05
4.140	3/4"	10,9	28	170,13	5	25	140	144	580405500P05	-	-
	1"	16,0	20	162,38					580440300P05	580442300P20	580440351P05
5.170	1"	16,0	24	194,59	5	28	170	175	580440400P05	580442400P20	-
	1" 1/4	18,3	20	202,98					580417200P05	-	-
▲ **6.205**	1" 1/4	18,3	26	263,40	5	32	205	210	580406200P05	580407600P20	-
▲ **7.240**	1" 1/4	18,3	28	283,56	5	35	240	245	580406300P05	580407700P20	-
▲ **8.300**	1" 1/2	23,8	28	340,27	6	40	300	306	580407000P05	580407300P20	-
▲ **9.340**	1" 1/2	23,8	32	388,69	6	40	340	355	580407100P05	580407400P20	-
▲ **10.400**	1" 1/2	23,8	36	437,16	6	42	400	403	580407200P05	580407500P20	-

▲ On request

SENSOR CONNECTION EXAMPLE

To maximize the lifetime of the friction rings and maintain the performance of the limiter, you should promptly stop the drive as soon as the first slip occurs. This is possible using the model DF / SI combined with a micro-switch (model EM1 or EM2) or an inductive sensor (model PRX), see page 73.
If this is not possible, however, we suggest the use of an inductive sensor connected to a tachometer or frequency inverter in order to reveal the possible speed change of a metallic mass connected to the organ of transmission, as shown in the example below.

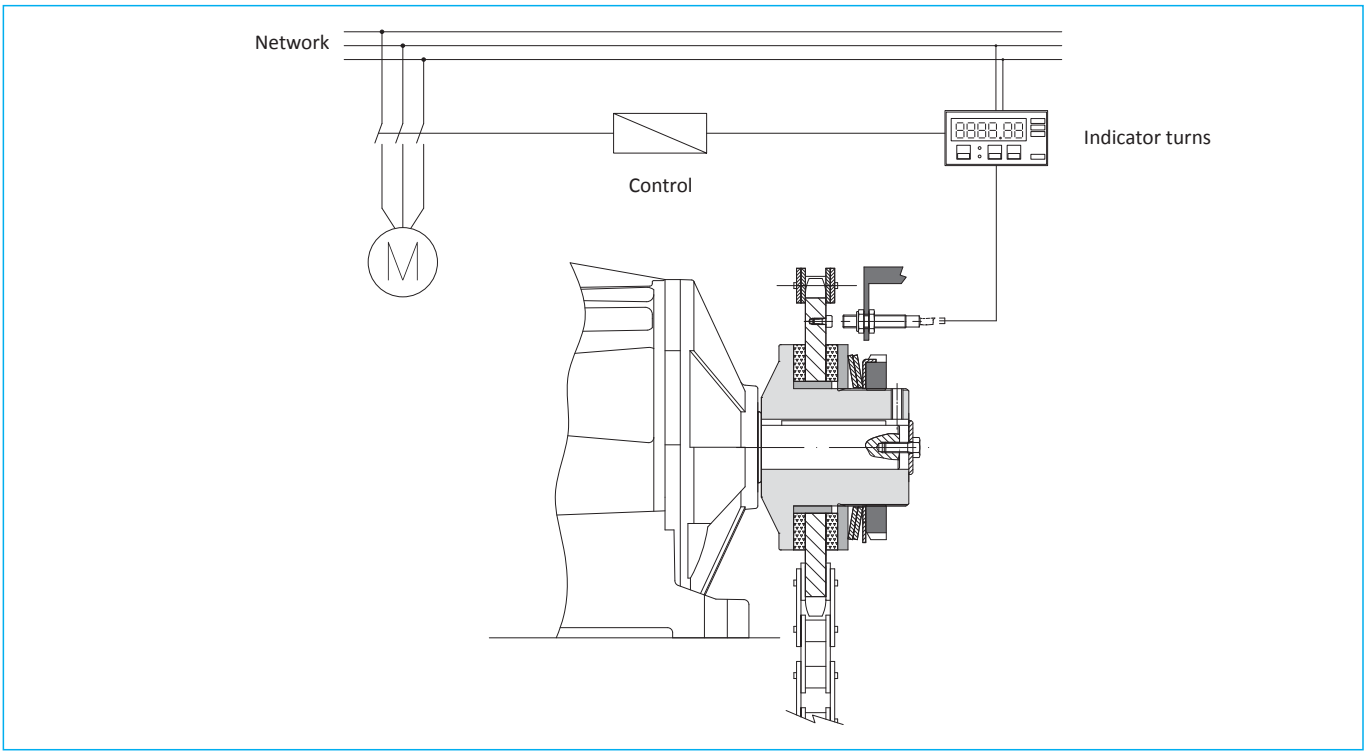

ORDER EXAMPLE

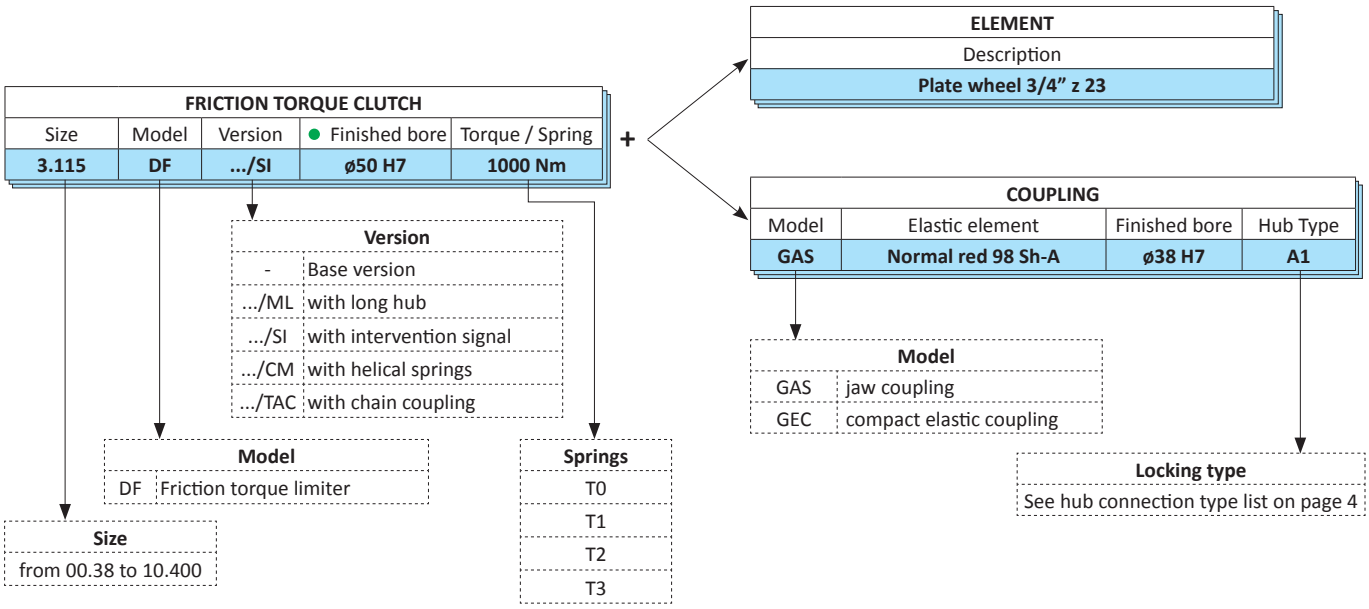

- If the version of DF/TAC state both finished bores (on the limiter and pinion TAC).

ECONOMIC BALL TORQUE LIMITER

(SAFETY COUPLINGS)

Up to 1.450 Nm of torque and 55 mm bore

EDF

ComInTec®
Technology for Safety

HEXELUS

EDF/F - economic ball torque limiter: introduction

- Reduced torsional backlash by ball drive.
- Maintenance free for long lasting, high reliability.
- Version with 360° phase re-engagement available.
- Model available only with plate wheel or other transmission component.
- Innovative calibration system by “H dimension“ for an immediate calibration of the device.
- Possibility of combining a microswitch / proximity to stop the drive.
- Suitable for use in damp and oily environments.

ON REQUEST

- Complete with drive component or personalized plate wheel.
- Possibility of connections with locking assembly or other types of locking.
- Possibility of surface treatments for corrosion-specific needs.
- Personalized version with re-engagement in phase at 30°, 45°, 60°, 90°..

Safety coupling with the transmission of motion by means of hardened balls inserted directly in the drive element, obtaining a simple, compact and competitive device. The disengagement occurs quickly and safely allowing the stop of the transmission if the calibrated torque is exceeded.

	EDF/F: basic model for drive with platewheel or pulley, with parallel shafts	from 7,5 to 1450 Nm 55 mm max. bore	Page 19
	EDF/F/TAC: in-line shaft connection, simple and economic	from 7,5 to 1450 Nm 80 mm max. bore	Page 20

MAIN APPLICATION

- Filling machines.
- Metal chip conveyors.
- Automatic conveyor belts.
- Winches.

ADVANTAGES AND BENEFITS

- Protects the product from damage or wrong positioning.
- Protect the gear motor from accidental product collisions.
- Protect the drive against bumps or limit.
- Protects conveyor belts in case of product collisions.

ORDER EXAMPLE

ECONOMIC BALL TORQUE LIMITER				
Size	Model	.../version	● Finished bore	Torque/Spring
3.115	**EDF/F**	**/C**	**ø40H7**	**450Nm**

+

ELEMENT
Description
Plate wheel 3/4” Z23

Size
00.38 to 4.140

Model	
EDF/F	Economic ball torque limiter

Springs
T1
T2
T3

.../version	
.../C	with plate wheel
.../F	with flange
.../TAC	with chain coupling

● If the version EDF/F/TAC state both finished bores (on the limiter and pinion TAC).
Torque limiter available only with finished bore.

APPLICATION EXAMPLE

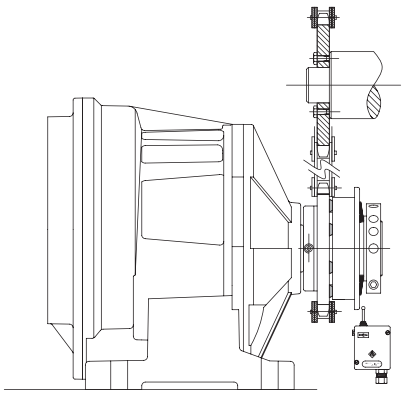

*Model **EDF/F/C** with plate wheel for parallel shaft connections.*

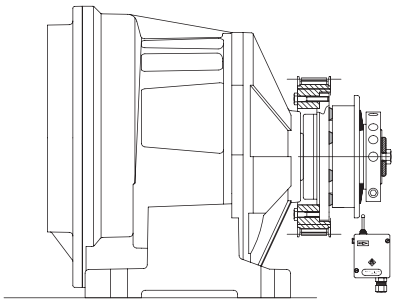

*Model **EDF/F/F** with connection flange integrated to the torque limiter, to fit pulleys, plate wheels, ...*

- Mounting of the drive organ within the device similar to the friction series.
- Automatic re-engagement after the restoration of transmission.
- Available with radial ring statically balanced
- Model with flange for custom links: EDF/F/F.
- Model available only with finished bore.
- Torque range from 7.5 to 1.450 Nm; max. bore ø55 mm.

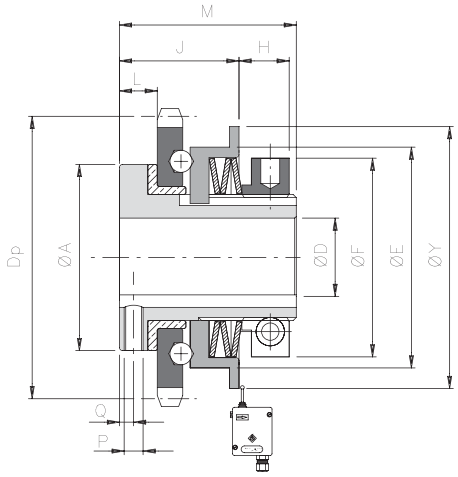

.../C (version with plate wheel)

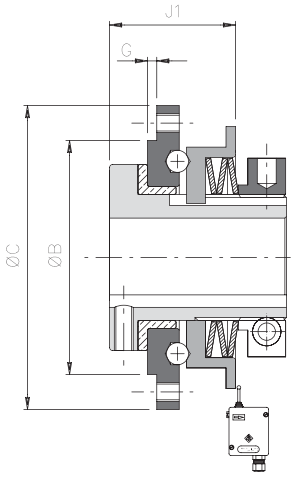

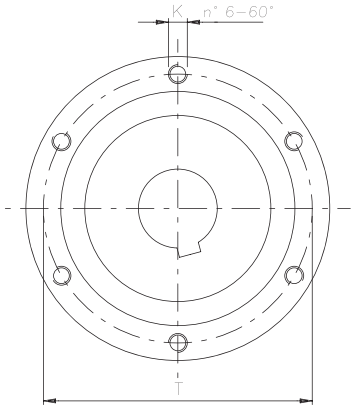

.../F (version with flange)

DIMENSIONS

Size	A	B h7	C	D H7		E	F	G	J1	K	L	M	P	Q	T	Y	Standard platewheel		
				pilot bore	max												lead	Dp	J
00.38	30	35	52	-	12	38	35	1	21	M4	6	33	M3	2	44	48	3/8" Z16	48,82	20,5
0.50	40	50	68	-	20	50	42	1,5	26	M5	8	42	M4	3	58	63	3/8" Z20	60,89	24,5
1.70	59	65	90	-	25	70	63	2	36	M5	11	55	M6	4	80	83	1/2" Z22	89,24	34
2.90	72	85	112	-	38	90	82	2	40	M6	12	61	M6	4,5	100	103	3/4" Z18	109,71	40
3.115	89	110	140	18	45	115	104	2	51	M8	14	71	M6	5,5	125	128	1" Z17	138,22	53
▲ **4.140**	104	135	174	24	55	140	128	2	57,5	M10	15	86	M8	5,5	155	153	1" Z20	162,38	58,5

TECHNICAL DETAILS

Size	Torque *[Nm]*			Inertia *[Kgm²]*		Max speed *[Rpm]*	Weight *[Kg]*	
	T1	T2	T3	Flange side	Nut side		EDF/F	EDF/F/F
00.38	7,5 - 15	14,5 - 30	-	0,000024	0,000032	1900	0,2	0,3
0.50	8 - 24	15 - 40	40 - 65	0,000076	0,000097	1400	0,5	0,7
1.70	12 - 37	30 - 68	53 - 120	0,000331	0,000562	1200	1,3	1,3
2.90	-	60 - 150	140 - 290	0,001001	0,001605	1000	2,4	2,5
3.115	-	145 - 385	215 - 580	0,003302	0,004868	800	4,1	4,1
▲ **4.140**	-	-	550 - 1450	0,008578	0,012687	650	6,9	7,1

▲ On request

NOTES

- Weights are relevant to the torque limiter with pilot bore (EDF/F/TAC), inertias refer to the torque limiter (EDF/F/TAC) hole max.
- Microswitches EM1 or EM2 and inductive sensor PRX see page 73

.../TAC - version with chain coupling: technical data

- Simple and compact solution for transmission with in-line shafts.
- Automatic re-engagement after the restoration of transmission
- Model EDF/F available only with finished bore (dimension D) .
- Available with radial ring statically balanced
- Possibility of combining a microswitch / proximity to stop the drive.
- Torque range from 7.5 to 1.450 Nm; max. bore ø80 mm.

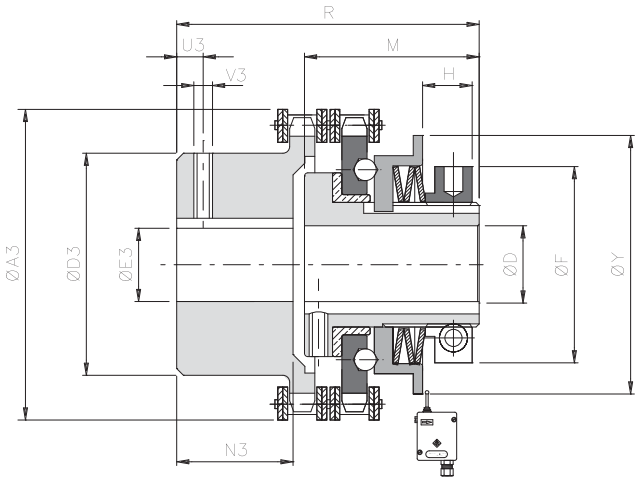

DIMENSIONS

Size	D H7		F	Y	M	R	A3	D3	E3 H7		N3	U3	V3
	pilot bore	max							pilot bore	max			
00.38	-	12	35	48	33	60	58	37	10	20	20	5	M3
0.50	-	20	42	63	42	67	75	50	12	28	19	8	M4
1.70	-	25	63	83	55	91	101	70	16	38	29	8	M4
2.90	-	38	82	103	61	107	126	89	20	55	38	12	M6
3.115	18	45	104	128	71	136	159	112	20	70	56,5	12	M6
▲ **4.140**	24	55	128	153	86	156	184	130	28	80	59,5	15	M8

TECHNICAL DETAILS

Size	Torque *[Nm]*			Misalignments			Max speed *[Rpm]*	Weight *[Kg]*
	T1	T2	T3	Angular α *[°]*	Axial *X [mm]*	Radial *K [mm]*		
00.38	7,5 - 15	14,5 - 30	-	2°	1,50	0,20	1900	0,6
0.50	8 - 24	15 - 40	40 - 65		1,50	0,20	1400	1
1.70	12 - 37	30 - 68	53 - 120		2,40	0,25	1200	2,9
2.90	-	60 - 150	140 - 290		3,20	0,30	1000	6,1
3.115	-	145 - 385	215 - 580		4,50	0,35	800	9,5
▲ **4.140**	-	-	550 - 1450		4,80	0,40	650	20

NOTES

▲ On request

- Weights are relevant to the whole group with pilot bore (EDF/F - EDF/F/TAC).
- Microswitches EM1 or EM2 and inductive sensor PRX see page 73

ComInTec®
HEXELUS

ROLLERS TORQUE LIMITERS

(SAFETY COUPLINGS)

Up to 12.000 Nm of torque and 120 mm bore

DSR

ComInTec®
Technology for Safety

HEXELUS

DSR - rollers torque limiter: introduction

- Precise torque setting by adjusting the radially balanced locking nut.
- Innovative calibration system by “H dimension“ for an immediate calibration of the device.
- Equidistant re-engagement in phase or at 360°.
- Available with electromechanical switch / proximity for the transmission disconnection.
- Immediate intervention for an improved reaction compared to electronic systems.
- Maintenance-free for long lasting high reliability.
- Suitable for oily and wet environments.

ON REQUEST

- Complete with transmission gear, fully turned and mounted (plate wheel, pulley, gear pair).
- Possibility to use helical springs for low intervention torques.
- Connections with bore and keyway, locking assembly possible.
- Version with personalized re-engagement in phase 36°, 45°, 60°, 90°, 120°, ... possible.

Safety coupling with the transmission of motion through rollers that allow complete disengagement when the calibrated torque is reached permitting a quick stop of the transmission due to micro-EM1. Suitable for transmitting high torque with high reliability and compact size.

MAIN APPLICATIONS

- Packaging and wrapping machines.
- Labelling machines.
- Bottling machines.
- Conveyors.

ADVANTAGES AND BENEFITS

- Protects the gearbox from jamming due to foreign matters.
- Protects packages from squashing and deforming.
- Protects the product handling elements from accumulations.
- Maintains the timing between driver and driven after an overload.

	DSR: Basic model.	from 2,5 to 12000 Nm 120 mm max bore	Page 25
	... / FS: suitable for the mounting of simple transmission.	from 2,5 to 12000 Nm 120 mm max bore	Page 26
	... + GTR: connection with torsionally rigid coupling.	from 2,5 to 2800 Nm 90 mm max bore	Page 27
	... + GAS: connection with flexible coupling with high misalignments.	from 2,5 to 9600 Nm 129 mm max bore	Page 27
	... + GEC: connection with flexible coupling with reduced misalignment.	from 2,5 to 12000 Nm 180 mm max bore	Page 28

EXAMPLE OF ASSEMBLY

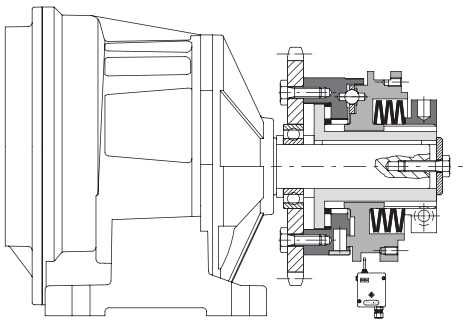

*Model **DSR** (or DSS) with organ supported by a bearing*
Transmission parallel shaft.

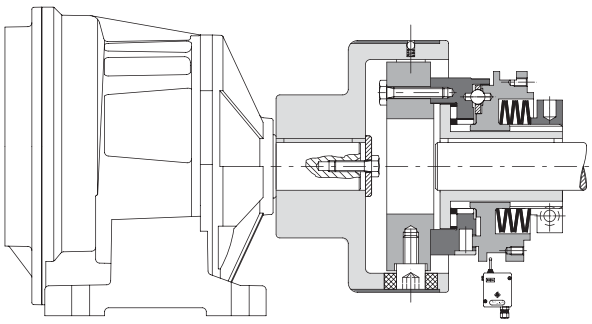

*Model **DSR** (or DSS) with elastic coupling compact **GEC***
for transmissions to coaxial shafts.

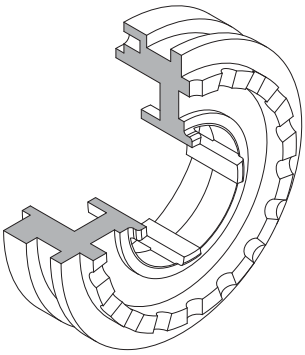

DSR: Roller torque limiter for steady transmission with high torques and vibrations

- Roller transmission.
- Equidistant automatic re-engagement.
- High torque settings at reduced dimensions.
- Same intervention torque in both directions.
- Torque range from 10 to 12.000 Nm; max. bore ø120 mm.

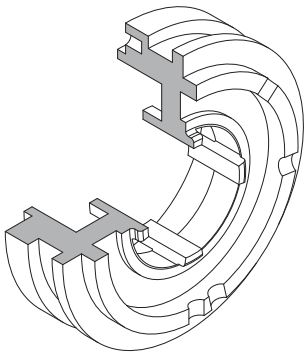

DSR/F: Roller phase torque limiter, synchronised connection between input and output.

- Roller transmission.
- Optimized roller arrangement (patented) with perfect stability and 3 point contact.
- Automatic re-engagement in phase 360° or personalized (30°, 45°, 60°, 90°, 120°, ...)
- High torque settings with compact dimensions.
- Torque range from 10 to 12000 Nm; max. bore ø120 mm.

The safety devices ComInTec with reengements in “phase” are characterized by a unique distribution of the rollers that represents the mathematically optimal solution to have a secure support balanced in all possible positions within 360°. When the limiter disengages, there are always at least three equally spaced rollers that rest on the rolling surface.

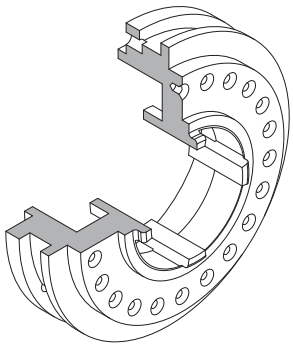

DSS: Ball torque limiter with optimum sensitivity in case of sudden torque variations (ON REQUEST)

- Ball transmission.
- High sensitivity and immediate intervention in case of minimal torque variation.
- Equidistant automatic re-engagement.
- Same intervention torque in both directions.
- Torque range from 2,5 to 2.050 Nm; max. bore ø68 mm.

NUMBER OF RE-ENGAGEMENTS IN 360 DEGREES

Model	Size							
	0.56	1.90	2.110	3.130	4.160	5.194	6.240	7.280
DSR	18	18	16	16	16	24	24	24
DSR/F	1	1	1	1	1	1	1	1
DSS	24	22	20	20	22	15	-	-

DSR - rollers torque limiter: versions

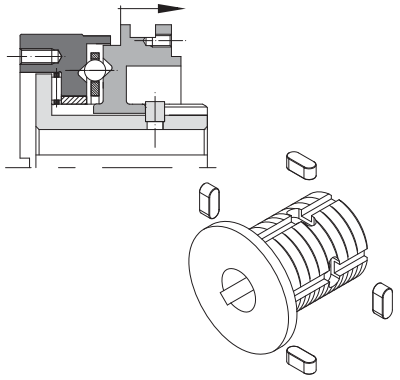

.../TAS: Torque limiter with stop pins

- Complete disconnection prevented.
- Minimum movement of the mobile base for an electrical signal to stop transmission.
- Roller or ball transmission.
- Torque range from 2,5 to 2.800 Nm; max. bore ø68 mm.
- Suitable for applications where the drive must not be disconnected.

The stop pins inserted in the dentral support as shown in the figure serve to limit the axial stroke of the device, preventing its complete disengagement and thus maintaining a stable transmission connection.

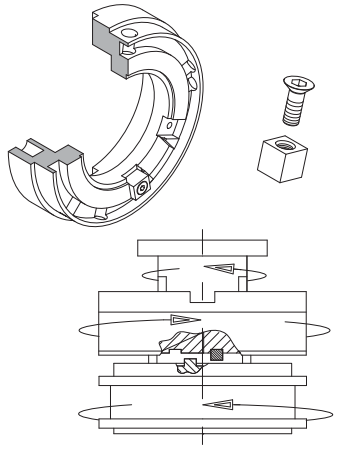

.../AM: Torque limiter with mechanical disconnection to maintain the timing between driver and driven

- Stop pin (patented) resists 4 times the maximum torque.
- 345° rotation allows the cancellation of the residual torque before the device stops.
- Maintains the timing and re-engages in the same position.
- High torque settings at reduced dimensions.
- Torque range from 10 to 2.800 Nm; max. bore ø68 mm.

To allow our engineers to select the correct direction “SX” or “DX” for your application, we require a drawing showing:
- how the unit will be mounted on to the shaft (orientation).
- the direction of rotation
- confirm which drive will continue to rotate after the overload,
- the shaft or plate wheel, pulley, etc.

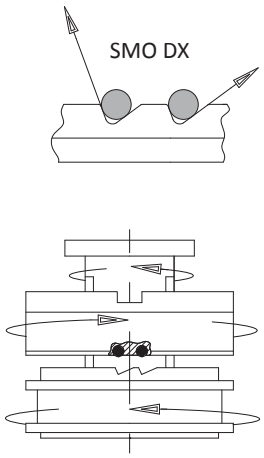

.../SMO: Torque limiter with different disengagement torques from clockwise to anti-clockwise rotation.

- Different intervention torques in the two rotation directions (patented).
- Locking of one direction possible.
- Roller transmission with automatic re-engagement.
- Available with equidistant re-engagement or personalized angular phases.
- Torque range from 10 to 12.000 Nm; max. bore ø120 mm.

To allow our engineers to select the correct direction “SX” or “DX” for your application, we require a drawing showing:
- how the unit will be mounted on to the shaft (orientation).
- the direction of rotation.
- in which direction the high/low torque is required.

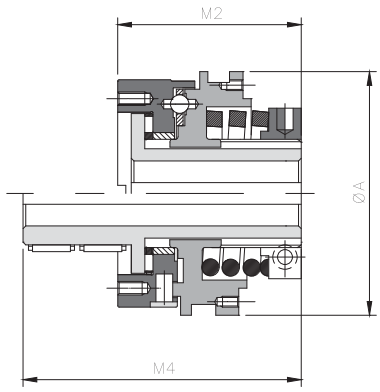

.../CM: minimum torque version

Helical springs execution, for a wider torque range and consequently a finer adjustment on calibration is possible

Size	Model	Torque *[Nm]*		A	M2	M4
		spring ST	spring SQ			
0.56	DSS DSR	0,8 - 10,9 1,9 - 25,6	-	56	64,5	92
1.90	DSS DSR	2 - 40 8 - 75	5 - 90 8 - 145	90	75	110
2.110	DSS DSR	9 - 50 12 - 90	12 -100 25 - 190	110	91	129
3.130	DSS DSR	12 -135 30 -300	24 - 190 50 - 320	130	110	157

- Basic model, connection with in-line shafts possible.
- The assembly with helical springs allows a higher sensitivity in torque setting: .../CM.
- Available with longer shaft for the assembly with transmission elements of large size : .../ML.
- Available with anti-corrosive surface treatments.
- Available with intervention signal ring.
- Torque range from 2,5 to 12.000 Nm; max. bore ø120 mm.

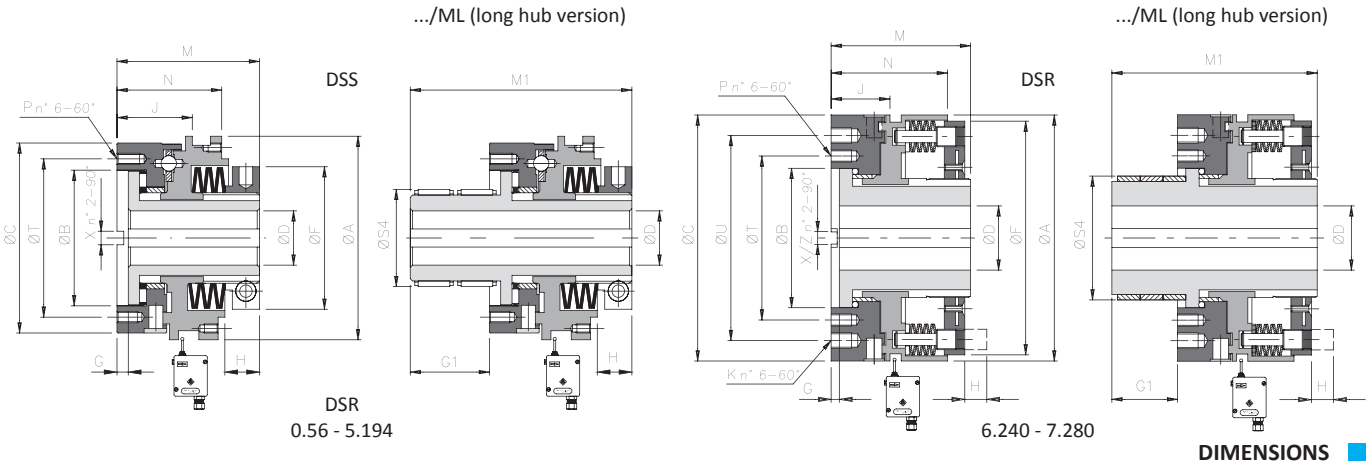

DIMENSIONS

Size	Mod.	A	B H7	C	D H7 pb	D H7 max	D H7 max /ML	F	G	G1	J	M	M1	N	P	S4 h7 Bushing	S4 h7 Bearing	T	X	U	Z
0.56	DSS DSR	56	41	56	-	20	20*	42	3,8	27,5	21 20	46	73,5	32 31,5	M5	33	33	48	6x3	-	6x3
1.90	DSS DSR	90	60	84	-	28	28*	63	5	35	33,5 27,5	63	98	47 45	M5	45	43	70	6x3	-	6x3
2.110	DSS DSR	110	78	104	-	40	38	82	6	38	39 36,5	76	114	54 52	M6	60	55	89	8x3,5	-	8x3,5
3.130	DSS DSR	130	90,5	124	20	50	50*	104	6	47	47 45	88	135	65 64	M8	72	70	105	10x4	-	10x4
4.160	DSS DSR	160	105	148	25	58	58*	128	8	53	58,5 54,5	107	160	76,5	M10	85	83	125	12x4	-	12x4
5.194	DSS DSR	194	120,5	176	28	68	68*	157	6,5	57,5	65 64,5	124,5	182	88 88,5	M12	98	98	155	14x4,6	-	14x4,6
6.240	DSR	240	136	240	50	90	▲ 90	227	8	▲ 64	54,5	141	▲205	113,5	M12	▲ 118	-	160	18x5,1	200	16x5,1
7.280	DSR	280	198	280	50	120	▲120	262,5	8	▲ 82	82	200	▲282	159	M20	▲ 168	-	230	20x6,1	-	20x6,1

* with reduced keyway UNI 7510.

TECHNICAL DETAILS

Size	Model	Torque *[Nm]* T0	Torque *[Nm]* T1	Torque *[Nm]* T2	Inertia *[Kgm²]* Flange side	Inertia *[Kgm²]* Nut side	Inertia *[Kgm²]* Nut side .../ML	Max speed *[Rpm]*	Weight *[Kg]* DSR	Weight *[Kg]* .../ML
0.56	DSS DSR	2,5 - 9,5 10 - 20	5,5 - 17,5 14 - 37	15 - 32 30 - 75	0,00008	0,00010	0,00011	4500 1500	0,6	0,7
1.90	DSS DSR	20 - 49 50 - 105	25 - 65 85 - 145	35 - 115 130 - 265	0,00059	0,00106	0,00111	3000 1000	1,9	2,4
2.110	DSS DSR	19 - 72 60 - 150	55 - 160 142 - 330	80 - 290 275 - 620	0,00174	0,00268	0,00281	2500 800	3,6	4,4
3.130	DSS DSR	50 - 225 115 - 370	70 - 300 200 - 510	130 - 540 430 - 900	0,00441	0,00639	0,00686	2000 700	6,0	7,3
4.160	DSS DSR	-	150 - 690 330 - 1040	300 - 1280 750 - 1800	0,01067	0,01797	0,01891	1600 550	10,7	13,2
5.194	DSS DSR	-	360 - 1040 540 - 1620	460 - 2050 1050 - 2800	0,02873	0,04239	0,04453	1300 400	18,2	21,6
6.240	DSR	1600 - 3800	2000 - 8000	-	0,10306	0,16930	0,17371	300	30,6	▲ 38,5
7.280	DSR	2000 - 5600	2500 - 12000	-	0,09313	0,36412	0,39456	200	79	▲ 91,8

▲ On request

NOTES

- Weights are relevant to the pilot bore torque limiter (DSR or DSS), inertias refer to the torque limiter (DSS or DSR) hole max.
- Microswitches EM1 or EM2 and inductive sensor PRX see page 73

.../FS - version with supporting flange: technical data

- Basic model with flange for parallel shafts.
- The assembly with helical springs allows a higher sensitivity in torque setting: .../FS/CM.
- Available with anti-corrosive surface treatments.
- Available with /FIR flange for reduced axial dimensions.
- Available with /FAV flange for cardan coupling connection.
- Torque range from 2,5 to 12.000 Nm; max. bore ø120 mm.

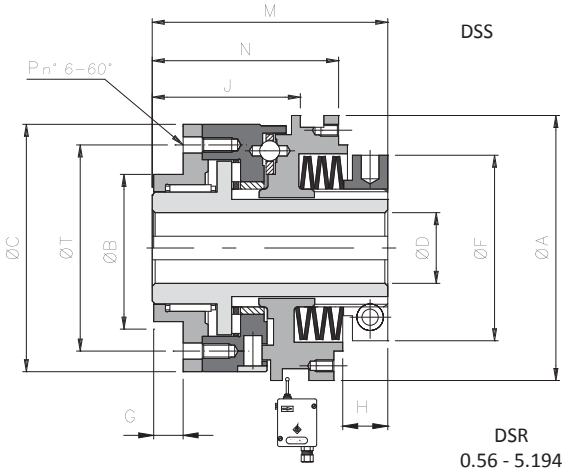

DSR
0.56 - 5.194

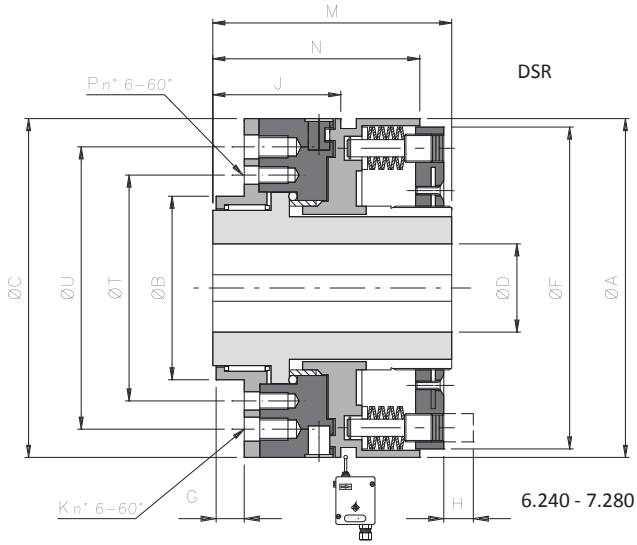

6.240 - 7.280

DIMENSIONS

Size	Model	A	B h7	C	D H7 Pilot bore	D H7 max	F	G	J	K	M	N	P	T	U
0.56	DSS DSR	56	38	56	-	20*	42	7,5	34,5 33	-	59	45 44	M5	48	-
1.90	DSS DSR	90	50	84	-	28*	63	9,5	50,5 44,5	-	80	64 62	M5	70	-
2.110	DSS DSR	110	60	104	-	38	82	11,5	56 53,5	-	93	71 69	M6	89	-
3.130	DSS DSR	130	80	124	20	50*	104	11,5	65 63	-	106	83 82	M8	105	-
4.160	DSS DSR	160	100	148	25	58*	128	15,5	83,5 79,5	-	132	101,5	M10	125	-
5.194	DSS DSR	194	120	176	28	68*	157	17,5	92,5 93	-	152	115,5 116	M12	155	-
6.240	DSR	240	130	240	50	90	227	18	83,5	M16	170	142,5	M12	160	200
7.280	DSR	280	190	280	50	120	262,5	30	130	-	248	207	M20	230	-

* with reduced keyway UNI 7510.

TECHNICAL DETAILS

Size	Model	Torque *[Nm]* T0	Torque *[Nm]* T1	Torque *[Nm]* T2	Inertia *[Kgm²]* Flange side	Inertia *[Kgm²]* Nut side	Max speed *[Rpm]*	Weight *[Kg]*
0.56	DSS DSR	2,5 - 9,5 10 - 20	5,5 - 17,5 14 - 37	15 - 32 30 - 75	0,00012	0,00010	4500 1500	0,7
1.90	DSS DSR	20 - 49 50 - 105	25 - 65 85 - 145	35 - 115 130 - 265	0,00087	0,00109	3000 1000	2,4
2.110	DSS DSR	19 - 72 60 - 150	55 - 160 142 - 330	80 - 290 275 - 620	0,00234	0,00275	2500 800	4,4
3.130	DSS DSR	50 - 225 115 - 370	70 - 300 200 - 510	130 - 540 430 - 900	0,00575	0,00660	2000 700	7,1
4.160	DSS DSR	-	150 - 690 330 - 1040	300 - 1280 750 - 1800	0,01447	0,01848	1600 550	13
5.194	DSS DSR	-	360 - 1040 540 - 1620	460 - 2050 1050 - 2800	0,03664	0,04352	1300 400	21,6
6.240	DSR	1600 - 3800	2000 - 8000	-	0,13005	0,17123	300	37,5
7.280	DSR	2000 - 5600	2500 - 12000	-	0,18058	0,38306	200	90,5

NOTES

- Weights are relevant to the pilot bore torque limiter (.../FS), inertias refer to the torque limiter (.../FS) hole max.
- Microswitches EM1 or EM2 and inductive sensor PRX see page 73

... + GTR - model with torsionally rigid coupling: technical data

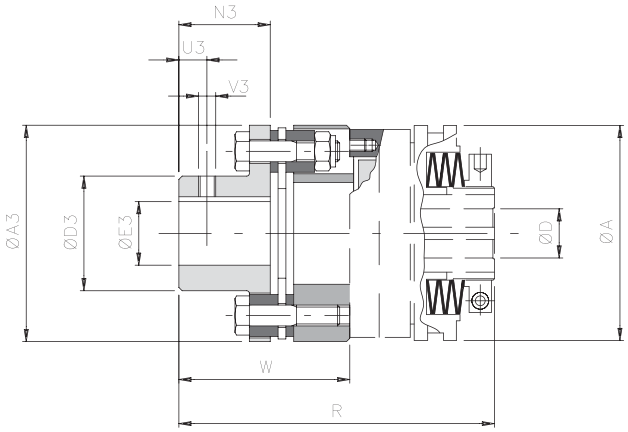

DIMENSIONS AND TECHNICAL DETAILS

Size		Torque *[Nm]*		A3	D3	E3 H7 max	N3	U3	V3	A	D H7		R	W	Misalignments			Rigidity *[Nm/rad•10³]*	Max speed *[Rpm]*		Weight *[Kg]*
DSS DSR	GTR	Nom	Max								Pilot bore	max			Angular α *[°]*	Axial X *[mm]*	Radial K *[mm]*		DSS	DSR	
0.56	0	60	120	78	45	32	29	10	M5	56	-	20	105	59	1°	1,40	0	80	4500	1500	1,4
1.90	2	150	300	92	53	38	42	10	M5	90	-	28	137	74	0° 45’	0,95		156	3000	1000	2,1
2.110	3	300	600	112	65	45	46	15	M8	110	-	40	161	85	0° 45’	1,25		415	2500	800	3,9
3.130	4	700	1400	136	75	52	56	15	M8	130	20	50	186	98	0° 45’	1,45		970	2000	700	5,8
4.160	5	1100	2200	162	92	65	66	20	M8	160	25	58	223	116,5	0° 45’	1,65		1846	1600	550	10,8
5.194	7	2600	5200	206	130	90	92	20	M10	194	28	68	270	145,5	0° 45’	2,25		3511	1300	400	21,9

... + GAS - model with jaw coupling: technical data

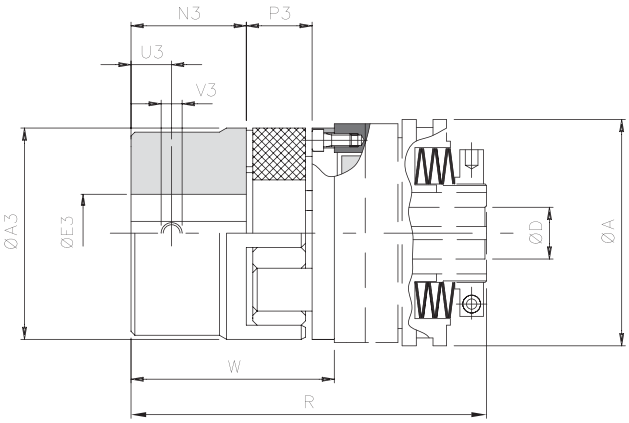

DIMENSIONS AND TECHNICAL DETAILS

Size			Torque *[Nm]*		A3	E3 H7 max	N3	P3	U3	V3	A	D H7		R	W	Misalignments			Max speed *[Rpm]*		Weight *[Kg]*
DSS DSR	GAS		Nom	Max								Pilot bore	max			Angular α *[°]*	Axial X *[mm]*	Radial K *[mm]*	DSS	DSR	
	Std	▲ Min																			
0.56	0 (24)	00 (19)	60	120	55	35	30	18	10	M5	56	-	20	105	57	1° 18’	1	0,22	4500	1500	0,8
1.90	2 (38)	0 (24)	325	650	80	48	45	24	15	M8	90	-	28	141	78		1,4	0,28	3000	1000	3,7
2.110	4 (48)	1 (28)	525	1050	105	62	56	28	20	M8	110	-	40	171	95		1,7	0,36	2500	800	5,2
3.130	5 (55)	2 (38)	685	1370	120	74	65	30	20	M10	130	20	50	198	110		1,8	0,38	2000	700	9,1
4.160	7 (75)	4 (48)	1465	2930	160	95	85	40	25	M10	160	25	58	249	142		2,5	0,48	1600	550	17,9
5.194	8 (90)	5 (55)	3600	7200	200	110	100	45	30	M12	194	28	68	288,5	164		2,8	0,50	1300	400	29,5
▲ **6.240**	9 (100)	-	3300	6600	225	115	110	50	30	M12	240	50	90	326	185		3,0	0,52	-	300	-
▲ **7.280**	10 (110)	-	4800	9600	255	125	120	55	33	M16	280	50	120	412	212		3,2	0,55	-	200	-

▲ On request

NOTES

- Data is relevant only to application (GTR - GAS),for torque limiter data see on page 25.
- Weights are relevant to the pilot bore torque limiter (GTR - GAS).
- Microswitches EM1 or EM2 and inductive sensor PRX see page 73

... + GEC - model with compact elastic coupling: technical data

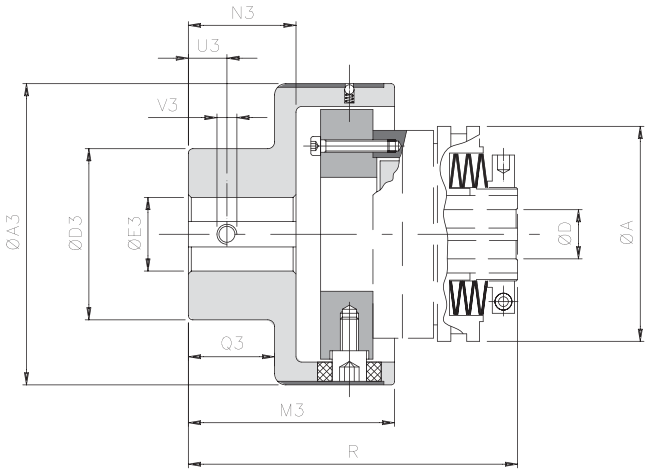

DIMENSIONS

Size		Torque *[Nm]*		A3	D3	E3 H7		M3	N3	Q3	U3	V3	A	D H7		R
DSS - DSR	GEC	Nom	Max			pilot bore	max							pilot bore	max	
0.56	0	70	110	78	50	10	28	63,5	32	28	8	M4	56	-	20	100,5
1.90	1	280	420	108	70	12	38	89	49	44	12	M6	90	-	28	142
2.110	2	570	860	130	80	15	45	111	65	59	15	M8	110	-	40	177
3.130	3	980	1500	161	100	15	60	140	85	77	15	M8	130	20	50	215
4.160	4	2340	3600	206	120	20	70	168	105	97	20	M10	160	25	58	261
5.194	5	3880	5800	239	135	30	80	201	130	120	20	M10	194	28	68	309,5
▲ **6.240**	6	15000	20000	315	215	40	150	260	165	150	25	M12	240	50	90	381
▲ **7.280**	7	30000	35000	364	240	40	180	310	205	185	25	M12	280	50	120	485

TECHNICAL DETAILS

Size		Misalignments						Max speed *[Rpm]*		Weight *[Kg]*
DSS DSR	GEC	Angular α *[°]*		Axial X *[mm]*		Radial K *[mm]*				
		continuous	intermittent	continuous	intermittent	continuous	intermittent	DSS	DSR	
0.56	0	1°	1° 30'	± 0,7	± 1,5	0,5	0,7	4500	1500	1,2
1.90	1	0° 48'	1°	± 0,7	± 1,5	0,5	0,7	3000	1000	3,5
2.110	2	0° 36'	0° 48'	± 0,7	± 1,5	0,6	0,7	2500	800	6,2
3.130	3	0° 30'	0° 42'	± 0,8	± 1,6	0,6	0,8	2000	700	11,5
4.160	4	0° 24'	0° 30'	± 0,8	± 1,6	0,6	0,8	1600	550	20,8
5.194	5	0° 24'	0° 30'	± 0,8	± 1,6	0,6	0,8	1300	400	32
▲ **6.240**	6	0° 24'	0° 30'	± 0,8	± 1,6	0,6	0,8	-	300	91,3
▲ **7.280**	7	0° 24'	0° 30'	± 0,8	± 1,6	0,6	0,8	-	200	173,9

OTHER COUPLINGS ON REQUEST

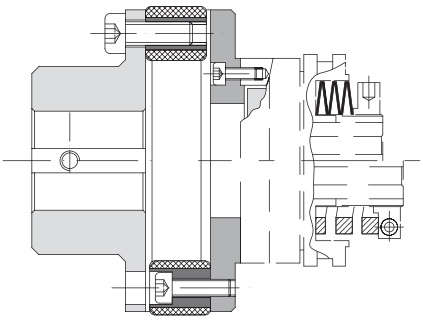

*Model **DSR** (or DSS) with elastic coupling **GF** to absorb high torsional vibrations and for fast substitution of the elastic element.*

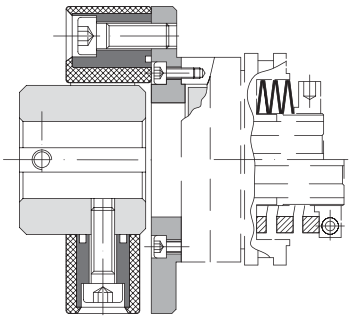

*Modello **DSR** (or DSS) with elastic coupling **GGF** to accept high misalignments.*

NOTES

▲ On request

- Data is relevant only to application (GEC),for torque limiter data see on page 25.
- Weights are relevant to the pilot bore torque limiter (GEC).
- Microswitches EM1 or EM2 and inductive sensor PRX see page 73

ComInTec®
HEXELUS

DSR - rollers torque limiter: versions on request

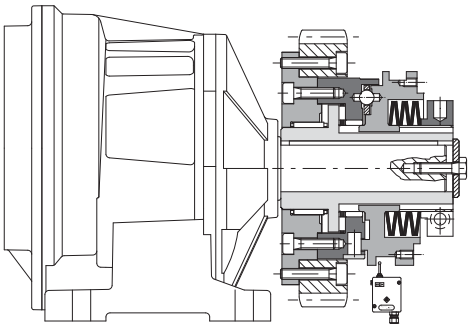

.../FIR

Flange designed to minimize axial dimensions, supported by the cage and rollers.

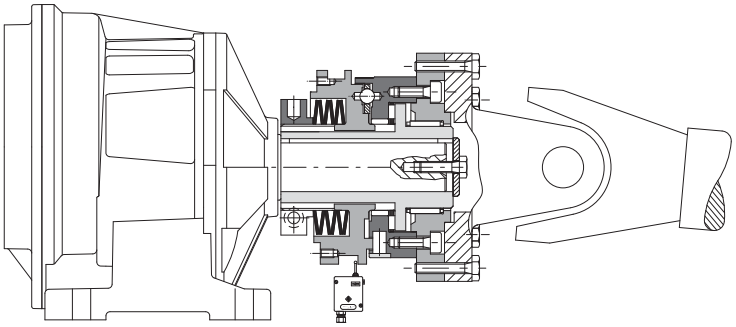

.../FAV

Flange designed and arranged for the connection of the cardan shafts, supported by the cage and rollers.

DSR - rollers torque limiter: additional information

ORDER EXAMPLE

ROLLERS TORQUE LIMITER				
Size	Model	.../Version	Finished bore	Torque/Springs
2.110	**DSR/F**	**-**	**ø30 H7**	**350 Nm**

+

COUPLING			
Model	Elastomeric element	Finished bore	Hub type
GAS	**Normal red element 98 Sh-A**	**ø38 H7**	**A1**

Size
0.56 to 7.280

Springs
T0
T1
T2

Model	
GTR	Torsionally rigid disc coupling
GAS	Elastic jaw coupling
GEC	Compact elastic coupling

Model	
DSR	Roller torque limiter
DSR/F	Roller phase torque limiter
DSS	Ball torque limiter

Version	
-	base version
.../ML	with long hub
.../FS	with supporting flange
.../CM	with helical springs
.../SMO	with one-way rotation
.../AM	with mechanical stop
.../TAS	with stops pin

Locking type
See hub connection type list on page 4

BACKLASH FREE TORQUE LIMITER

(SAFETY COUPLINGS)

Up to 1.200 Nm of torque and 65 mm bore

DSS/SG

ComInTec®
Technology for Safety

HEXELUS

DSS/SG - backlash free torque limiter: introduction

- Exact torque regulation through a balanced radial nut.
- Innovative calibration system by “H dimension“ for an immediate calibration of the device.
- Re-engagement in equidistant phase (DSS/SG) or 360° (DSS/F/SG).
- Maintenance free.
- Possibility to add a microswitch / proximity to stop the motor drive.
- Model available only with finished bore.
- Drive component assembled and directly supported by a ball bearing.

ON REQUEST

- Complete with transmission component worked and assembled (plate wheel, pulley, gear,...)
- Possibility of connection with 8 holes interchangeable with other products on the market.
- Possibility to have a connection flange to the most common intermittent drive units.
- Feasibility in personalized phase at 30°, 45°, 60°, 90°, ...

A ball safety coupling with high technology and precision. Provides backlash free transmission of motion with high sensitivity of reaction and an immediate release without peak load prior to release. The device can be adjusted by changing the pressure of the springs in the negative.

MAIN APPLICATIONS

- Print machines and packaging machines.
- CNC tool machines.
- Index tables, filling machines, guiders.
- Servomotors, slide guides.

ADVANTAGES AND BENEFITS

- To protect the product against faulty positioning on the rotating table.
- To protect the indexing against overloading along the transmission.
- To protect the operating units of machine tools against impacts.
- To protect slides or servomotors against impact or limit stops.

	.../P: base model for a high sensitivity in calibration.	from 4 to 1050 Nm 50 mm max. bore	Page 34
	.../N: immediate disengagement when exceeding the calibration torque; low residual torque after the disengagement.	from 0,8 to 1200 Nm 50 mm max. bore	Page 36
	... + GAS/CCE: connection by elastic coupling to accept high misalignments.	from 0,8 to 1200 Nm 62 mm max. bore	Page 38
	... + GAS/SG: connection by elastic coupling and single split clamp hub for a quick installation.	from 0,8 to 1200 Nm 60 mm max. bore	Page 39
	... + GSF: connection by bellows coupling for application with reduced inertia.	from 0,8 to 300 Nm 45 mm max. bore	Page 40

ON REQUEST STAINLESS STEEL VERSION “DSS/SG INOX” (NEWS)

- Model without any backlash.
- Same dimensions as the standard model, both in negative and positive versions.
- Made in stainless steel at high resistance by suitable heat treatments.
- High resistance to corrosion.
- Suitable to food and/or pharmaceutical environments.
- Torque range: 1,5 to 900 Nm; max. bore ø65 mm

ASSEMBLY EXAMPLES

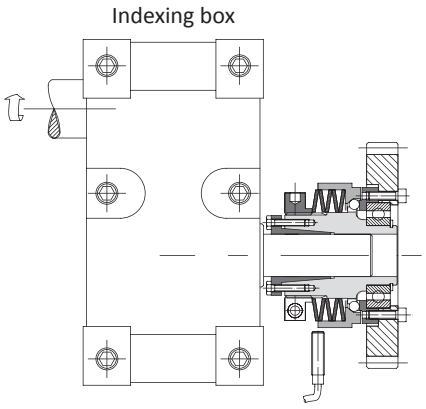

*Model **DSS/F/SG/P** assembled out of the indexing box*

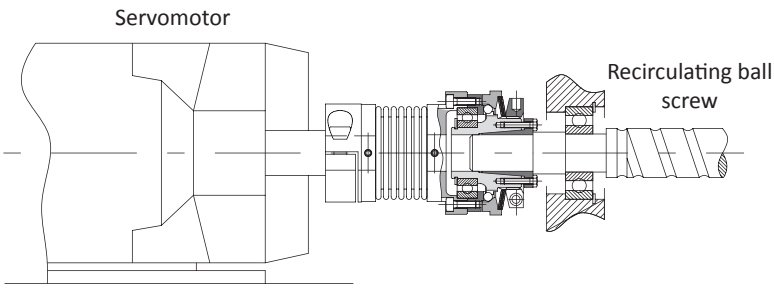

*Model **DSS/SG/N** assembled with bellows coupling **GSF** between servomotor and recirculating ball screw*

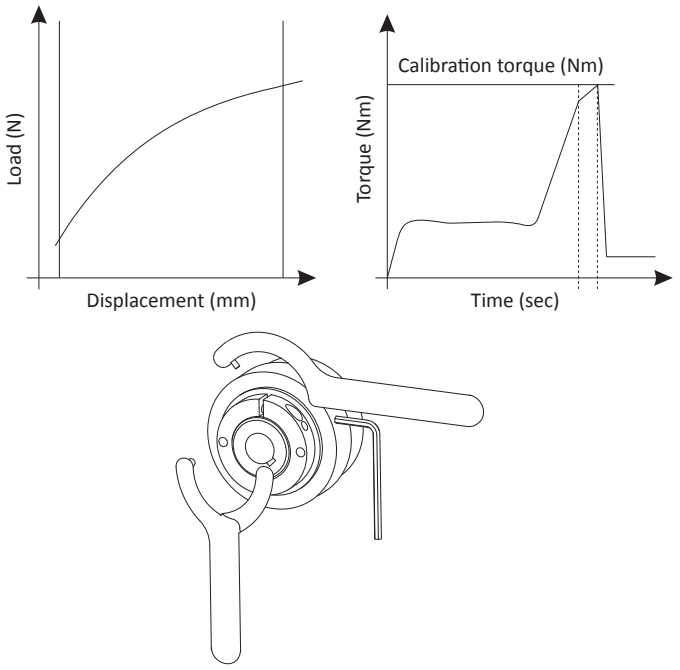

.../P - POSITIVE version (progressive spring)

This allows for a simpler and more linear calibration. Moreover, during disengagement it creates an increase in the torque, caused by the compression of springs, which, on presence of a non-homogenous (but normal) transmission, can be useful to avoid frequent disengagements and machine stops.

As with the majority of ComInTec TORQUE LIMITERS, by turning the adjuster nut clockwise, the disengagement torque increases. On the contrary turning it counter-clockwise, you obtain a reduction of the torque.

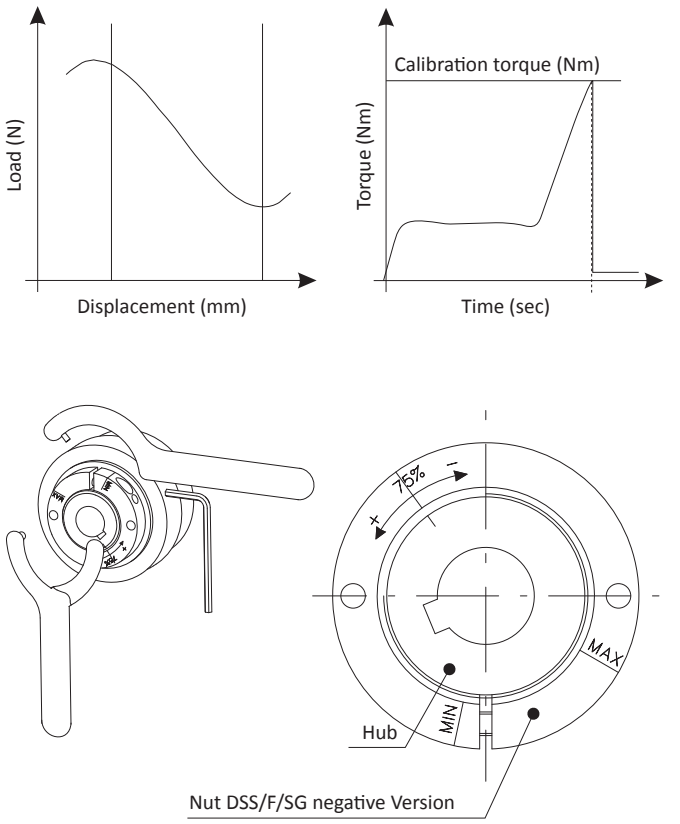

.../N - NEGATIVE version (regressive spring)

It generates an immediate torque reduction, as soon as there is a minor overload, with consequent disengagement of the limiter and immediate stop of the drive. This characteristic is very useful on sensitive applications where even a slight increase of the loads can cause damage to the machine or to the machine product.

Adjustment of the Negative version is opposite to all other units in our range. Unlike the traditional units, by rotating the adjuster nut clockwise the disengagement torque will reduce, and therefore to increase the torque the nut must be rotated anti-clockwise. To assist the operator in setting, there are clear markings on the nut showing 75% of the max torque and +/- Min/Max directions indicated.
Unless otherwise requested, these models are supplied pre-calibrated at 75% of the maximum torque value of the spring's chosen configuration.

.../P - POSITIVE version with bore and keyway: technical data

- Angular backlash free.
- Maximum simplicity of calibration by standard method.
- Wide regulation torque range.
- Very fast response times.
- Available with extended hub to assemble wide drive components: .../ML.
- Torque ranges: 4 - 1050 Nm; max. bore: ø65 mm.

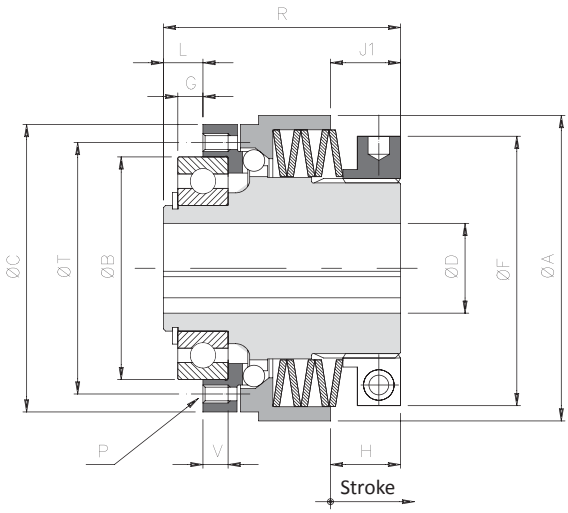

.../P/ML (long hub version)

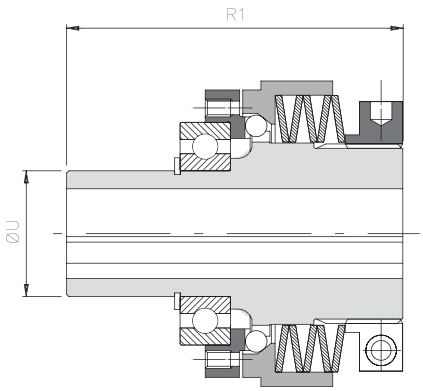

DIMENSIONS

Size	A	B h5	C	D H7 Max.	F	* G	L	J1	P	R	R1	T	U h6	V	On request "8C" B h5	C	G	L	P	T	V
00.40	44	30	40	12	38	2	4,5	12	6xM3	36	-	35	-	5	-	-	-	-	-	-	-
00.47	50	37	47	17	42	2	5	14,5	6xM3	44	-	42	-	5	-	-	-	-	-	-	-
0.63	70	42	65	20	63	4	7	18	6xM5	56,5	81,5	48	30	7	47	-	5	8	8xM4	56	6
1.80	85	62	80	25	75	7	11	19,5	6xM5	66	98	70	35	7	-	-	-	-	8xM5	71	-
2.96	100	75	96	35*	82	9	14	20	6xM6	77,5	118,5	89	45	9	-	95	-	-	8xM6	85	-
3.116	115	90	115	42	104	8	14	16,5	6xM8	82	133	105	55	12	-	110	10	16	8xM6	100	10
4.138	139,5	100	138	50	128	6,5	14,5	18	6xM10	96	151	125	65	14	-	130	10	18	8xM8	116	11
▲ **5.172**	172	130	172	65	157	11	20	27	6xM12	130	185	155	85	18	-	166	12	21	8xM10	150	15

TECHNICAL DETAILS

Size	Torque *[Nm]* T1	T2	T3	Stroke *[mm]*	Inertia *[Kgm²]* Flange side	Nut side	Max speed *[Rpm]*	Weight *[Kg]* .../P	.../P/ML
00.40	4 - 10	-	-	0,8	0,000009	0,000043	4000	0,3	-
00.47	8 - 15	11 - 35	-	1	0,000015	0,00007	4000	0,5	-
0.63	5 - 20	11 - 40	20 - 75	1,1	0,00008	0,00033	4000	1,1	1,2
1.80	12 - 35	-	30 - 105	1,3	0,00029	0,00091	3000	1,8	1,9
2.96	-	35 - 115	50 - 200	1,5	0,00068	0,00213	2500	3,2	3,5
3.116	-	70 - 290	110 - 415	2	0,00129	0,00352	2000	4,2	4,6
4.138	-	-	315 - 750	2,2	0,00315	0,00853	1200	7,5	8,1
▲ **5.172**	-	-	450 - 1050	2,5	0,01012	0,02595	800	10,6	11,8

NOTES

▲ On request

- **DH7*:** maximum diameter for finished bore with reduced keyway according to UNI 7510.
- **G*:** assembly tolerance +0,1.
- Weights are relevant to the pilot bore; inertias refer to the maximum diameter for finished bore of the torque limiter (.../P).
- Microswitches EM1 or EM2 and inductive sensor PRX see page 73

ComInTec® HEXELUS

.../P - POSITIVE version with bore and locking assembly: technical data

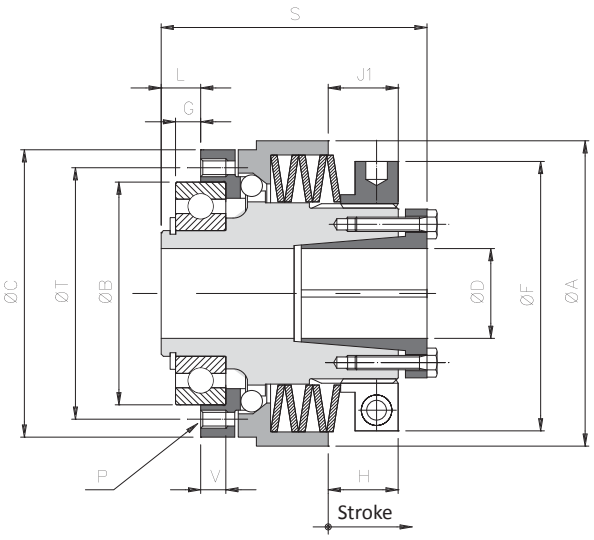

.../P/ML (long hub version)

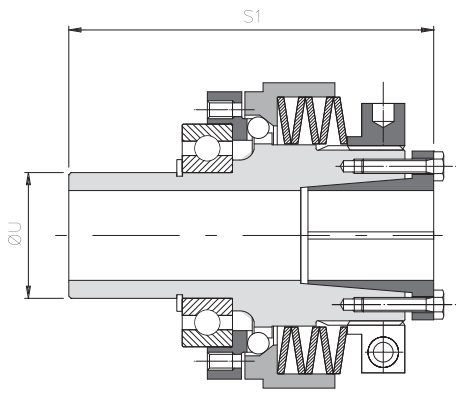

DIMENSIONS

Size	A	B h5	C	D H7 Max.	F	* G	L	J1	P	S	S1	T	U h6	V	On request "8C" B h5	C	G	L	P	T	V
00.40	44	30	40	12	38	2	4,5	12	6xM3	40,5	-	35	-	5	-	-	-	-	-	-	-
00.47	50	37	47	17	42	2	5	14,5	6xM3	49,5	-	42	-	5	-	-	-	-	-	-	-
0.63	70	42	65	20	63	4	7	18	6xM5	63,5	88,5	48	30	7	47	-	5	8	8xM4	56	6
1.80	85	62	80	25	75	7	11	19,5	6xM5	74	106	70	35	7	-	-	-	-	8xM5	71	-
2.96	100	75	96	35*	82	9	14	20	6xM6	85,5	126,5	89	45	9	-	95	-	-	8xM6	85	-
3.116	115	90	115	42	104	8	14	16,5	6xM8	91	142	105	55	12	-	110	10	16	8xM6	100	10
4.138	139,5	100	138	50	128	6,5	14,5	18	6xM10	107	162	125	65	14	-	130	10	18	8xM8	116	11
▲ **5.172**	172	130	172	55	157	11	20	27	6xM12	145	200	155	85	18	-	166	12	21	8xM10	150	15

TECHNICAL DETAILS

Size	Torque *[Nm]* T1	T2	T3	Stroke *[mm]*	Inertia *[Kgm²]* Flange side	Nut side	Max speed *[Rpm]*	Weight *[Kg]* .../P	.../P/ML
00.40	4 - 10	-	-	0,8	0,000009	0,000045	4000	0,3	-
00.47	8 - 15	11 - 35	-	1	0,000015	0,00008	4000	0,5	-
0.63	5 - 20	11 - 40	20 - 75	1,1	0,00008	0,00034	4000	1,1	1,2
1.80	12 - 35	-	30 - 105	1,3	0,00029	0,00094	3000	1,9	2,0
2.96	-	35 - 115	50 - 200	1,5	0,00068	0,00221	2500	3,4	3,7
3.116	-	70 - 290	110 - 415	2	0,00129	0,00372	2000	4,6	5,0
4.138	-	-	315 - 750	2,2	0,00315	0,00902	1200	8,1	8,7
▲ **5.172**	-	-	450 - 1050	2,5	0,01012	0,02674	800	11	12

▲ On request

NOTES

- **DH7*:** maximum diameter for finished bore with reduced keyway according to UNI 7510.
- **G*:** assembly tolerance +0,1.
- Weights are relevant to the pilot bore; inertias refer to the maximum diameter for finished bore of the torque limiter (.../P).
- Microswitches EM1 or EM2 and inductive sensor PRX see page 73

.../N - NEGATIVE version with bore and keyway: technical data

- Angular backlash free with compact dimensions.
- Instantaneous torque transmission reduction when overloading.
- Free of residual torque after disengagement.
- Fastest response times and highest sensitivity.
- Available with extended hub to assemble wide drive components: .../ML.
- Torque range: 0,8 - 1200 Nm; max. bore ø65 mm.

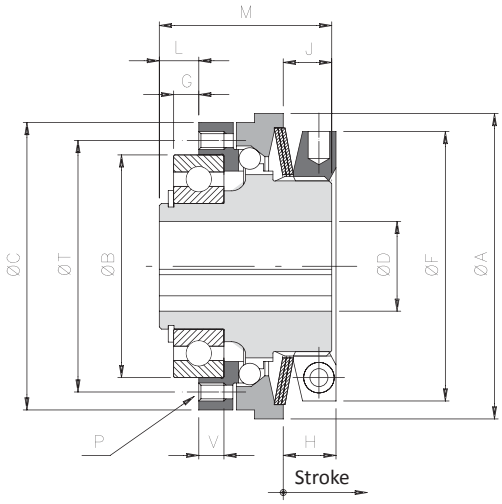

.../N/ML (long hub version)

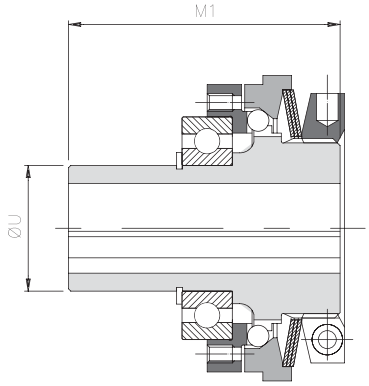

DIMENSIONS

Size	A	B h5	C	D H7 Max.	F	* G	L	J	P	M	M1	T	U h6	V	On request "8C" B h5	C	G	L	P	T	V
00.40	44	30	40	12	38	2	4,5	7	6xM3	24	-	35	-	5	-	-	-	-	-	-	-
00.47	50	37	47	17	42	2	5	8,5	6xM3	29	-	42	-	5	-	-	-	-	-	-	-
0.63	70	42	65	20	62	4	7	12	6xM5	40	65	48	30	7	47	-	5	8	8xM4	56	6
1.80	85	62	80	25	75	7	11	13,5	6xM5	48	80	70	35	7	-	-	-	-	8xM5	71	-
2.96	100	75	96	35*	82	9	14	16	6xM6	59	100	89	45	9	-	95	-	-	8xM6	85	-
3.116	115	90	115	42	97	8	14	17	6xM8	64	115	105	55	12	-	110	10	16	8xM6	100	10
4.138	135	100	138	50	117	6,5	14,5	20,5	6xM10	75	130	125	65	14	-	130	10	18	8xM8	116	11
▲ **5.172**	165	130	172	65	145	11	20	33	6xM12	105	160	155	85	18	-	166	12	21	8xM10	150	15

TECHNICAL DETAILS

Size	Torque *[Nm]* T1	T2	T3	T4	Stroke *[mm]*	Inertia *[Kgm²]* Flange side	Nut side	Max speed *[Rpm]*	Weight *[Kg]* .../N	.../N/ML
00.40	0,8 - 2,5	2,4 - 4,5	3,5 - 7	-	0,8	0,000009	0,00002	4000	0,2	-
00.47	3 - 7,5	5 - 15	8,5 - 23	-	1	0,000015	0,00004	4000	0,4	-
0.63	5 - 14	12 - 28	24 - 50	-	1,1	0,00008	0,00027	4000	0,9	1,0
1.80	9 - 28	18 - 60	40 - 100	-	1,3	0,00029	0,00068	3000	1,5	1,6
2.96	20 - 45	42 - 95	-	85 - 200	1,5	0,00068	0,00151	2500	2,8	3,0
3.116	35 - 100	75 - 200	-	195 - 415	2	0,00129	0,00262	2000	3,7	4,1
4.138	75 - 190	140 - 345	-	245 - 720	2,2	0,00315	0,00633	1200	6,7	7,3
▲ **5.172**	150 - 300	250 - 550	-	500 - 1200	2,5	0,01012	0,02075	800	9,4	10,4

NOTES

▲ On request

- **DH7*:** maximum diameter for finished bore with reduced keyway according to UNI 7510.
- **G*:** assembly tolerance +0,1.
- Weights are relevant to the pilot bore; inertias refer to the maximum diameter for finished bore of the torque limiter (.../N).
- Microswitches EM1 or EM2 and inductive sensor PRX see page 73

ComInTec®
HEXELUS

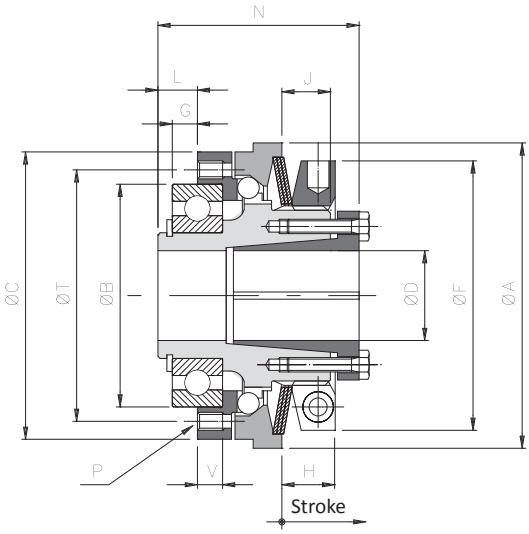

.../N/ML (long hub version)

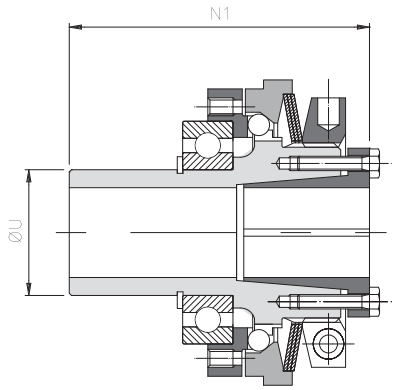

DIMENSIONS

Size	A	B h5	C	D H7 Max.	F	* G	L	J	P	N	N1	T	U h6	V	On request "8C" B h5	C	G	L	P	T	V
00.40	44	30	40	12	38	2	4,5	7	6xM3	28,5	-	35	-	5	-	-	-	-	-	-	-
00.47	50	37	47	17	42	2	5	8,5	6xM3	34,5	-	42	-	5	-	-	-	-	-	-	-
0.63	70	42	65	20	62	4	7	12	6xM5	47	72	48	30	7	47	-	5	8	8xM4	56	6
1.80	85	62	80	25	75	7	11	13,5	6xM5	56	88	70	35	7	-	-	-	-	8xM5	71	-
2.96	100	75	96	35*	82	9	14	16	6xM6	67	108	89	45	9	-	95	-	-	8xM6	85	-
3.116	115	90	115	42	97	8	14	17	6xM8	73	124	105	55	12	-	110	10	16	8xM6	100	10
4.138	135	100	138	50	117	6,5	14,5	20,5	6xM10	86	141	125	65	14	-	130	10	18	8xM8	116	11
▲ **5.172**	165	130	172	65	145	11	20	33	6xM12	120	175	155	85	18	-	166	12	21	8xM10	150	15

TECHNICAL DETAILS

Size	Torque *[Nm]* T1	T2	T3	T4	Stroke *[mm]*	Locking assembly Screws	Tightening torque *[Nm]*	Inertia *[Kgm²]* Flange side	Nut side	Max speed *[Rpm]*	Weight *[Kg]* .../N	.../N/ML
00.40	0,8 - 2,5	2,4 - 4,5	3,5 - 7	-	0,8	6xM3	1,5	0,000009	0,00002	4000	0,2	-
00.47	3 - 7,5	5 - 15	8,5 - 23	-	1	6xM3	1,5	0,000015	0,00004	4000	0,4	-
0.63	5 - 14	12 - 28	24 - 50	-	1,1	6xM4	4,1	0,00008	0,00028	4000	0,9	1,0
1.80	9 - 28	18 - 60	40 - 100	-	1,3	8xM4	4,1	0,00029	0,00071	3000	1,6	1,7
2.96	20 - 45	42 - 95	-	85 - 200	1,5	10xM4	4,1	0,00068	0,00158	2500	3,0	3,2
3.116	35 - 100	75 - 200	-	195 - 415	2	8xM5	8,5	0,00129	0,00282	2000	4,1	4,7
4.138	75 - 190	140 - 345	-	245 - 720	2,2	8xM6	14	0,00315	0,00682	1200	7,3	7,9
▲ **5.172**	150 - 300	250 - 550	-	500 - 1200	2,5	8xM8	35	0,01012	0,02154	800	9,8	10,8

▲ On request

NOTES

- **DH7*:** maximum diameter for finished bore with reduced keyway according to UNI 7510.
- **G*:** assembly tolerance +0,1.
- Weights are relevant to the pilot bore; inertias refer to the maximum diameter for finished bore of the torque limiter (.../N).
- Microswitches EM1 or EM2 and inductive sensor PRX see page 73

... + GAS/SG/CCE - model with jaw coupling and external locking assembly: technical data

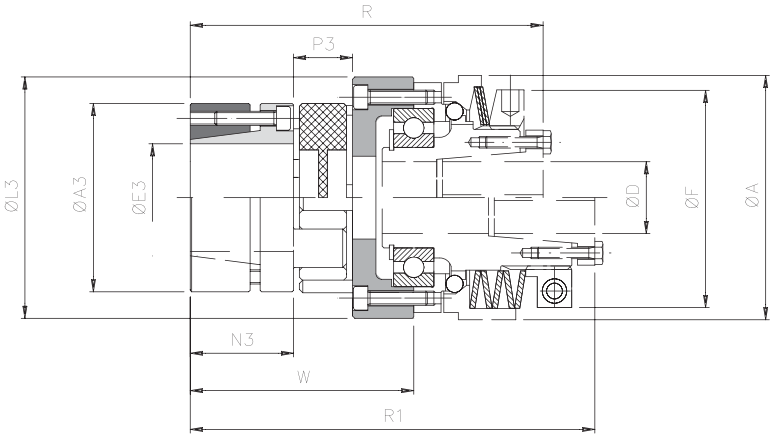

DIMENSIONS

Size		Torque *[Nm]*		A3	E3 H7 max	L3	N3	P3	A		D H7	F		W	R	R1
DSS/SG	GAS SG/CCE	Nom	Max						Positive	Negative	max	Positive	Negative			
00.47	00	17	34	40	20	49	25	16	50		17	42		53	82,5	97,5
0.63	0	60	120	55	28	65	30	18	70		20	63	62	63	102	118,5
1.80	1	160	320	65	38	84	35	20	85		25	75		74,5	119,5	137,5
2.96	2	325	650	80	48	102	45	24	100		35	82		93	146	164
3.116	3	450	900	95	55	122	50	26	115		42	104	97	100	159	177
4.138	4	525	1050	105	62	143	56	28	139,5	135	50	128	117	110,5	184	205
▲ **5.172**	6	1040	2080	135	75	178	100	35	172	165	65*	157	145	147	247	272

TECHNICAL DETAILS

Size		Clamp CCE		Misalignments			Rigidity			Inertia coupling side *[Kgm²]*	Max speed *[Rpm]*	Weight *[Kg]*
DSS/SG	GAS SG/CCE	Screws	Tightening torque *[Nm]*	Angular α *[°]*	Axial X *[mm]*	Radial K *[mm]*	Torsional *[Nm/rad]*	Axial *[mm]*	Radial *[mm]*			
00.47	00	6xM4	3	0° 54'	1,2	0,06	980	2340	2000	0,00013	4000	0,4
0.63	0	4xM5	6	0° 54'	1,4	0,10	3650	8100	2900	0,00040	4000	0,7
1.80	1	8xM5	6	0° 54'	1,5	0,11	4180	10700	3650	0,00107	3000	1,7
2.96	2	8xM6	10	0° 54'	1,8	0,12	8150	21850	5000	0,00296	2500	1,9
3.116	3	4xM8	35	0° 54'	2,0	0,15	15000	34000	5900	0,00559	2000	3,2
4.138	4	4xM8	35	0° 54'	2,1	0,16	16000	49000	6800	0,01213	1200	5,8
▲ **5.172**	6	4xM12	120	0° 54'	2,6	0,18	38000	97000	6400	0,04301	800	13

TRANSMITTABLE TORQUE WITH LOCKING ASSEMBLY

Size	Transmission torque *[Nm]* according to the ø finished bore *[mm]*																										
	10	**11**	**14**	**15**	**16**	**17**	**18**	**19**	**20**	**22**	**24**	**25**	**28**	**30**	**32**	**35**	**38**	**40**	**42**	**45**	**48**	**50**	**55**	**60**	**65**	**70**	**75**
00 (19)	48	53	67	72	77	81	86	91	96																		
0 (24)				77	82	88	93	98	103	113	124	129	144														
1 (28)							186	196	206	227	247	258	289	309	330	361	392										
2 (38)									291	320	349	364	408	437	466	510	553	582	612	655	699						
3 (42)												485	545	584	623	681	740	779	818	876	934	973	1071				
4 (48)														584	623	681	740	779	818	876	934	973	1071	1168			
▲ **6 (55)**																		1852	1944	2083	2222	2315	2546	2778	3009	3241	3472

NOTES

▲ On request

- **D H7*:** finished bore max = 55 H7 for positive version with shrink disk.
- These details refer only for the coupling (GAS/CCE with backlash free red element 98 Shore-A), for torque limiters details see on page 34-37.
- Weights are relevant only to the pilot bore (GAS/CCE); inertias refer only the coupling with maximum bore (GAS/CCE).
- Microswitches EM1 or EM2 and inductive sensor PRX see page 73

ComInTec®
HEXELUS

... + GAS/SG - model with jaw coupling and single split clamp hub type “B”: technical data

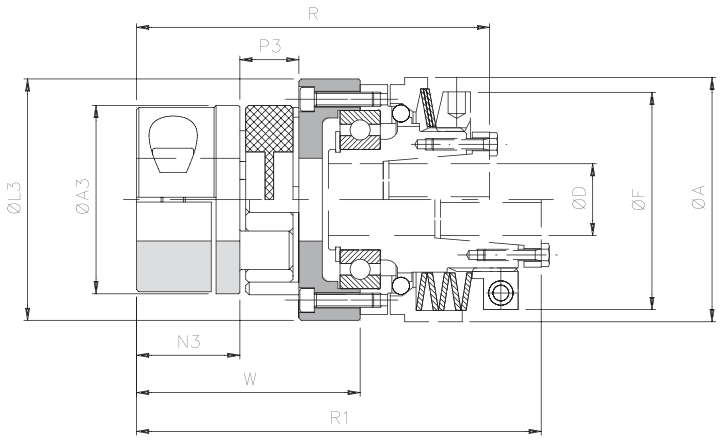

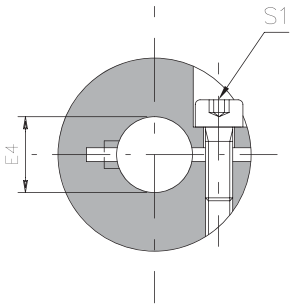

DIMENSIONS

Size		Torque *[Nm]*		A3	E3 H7 max	L3	N3	P3	A		D H7	F		W	R	R1
DSS/SG	GAS SG	Nom	Max						Positive	Negative	max	Positive	Negative			
00.47	00	17	34	40	20	49	25	16	50		17	42		53	82,5	97,5
0.63	0	60	120	55	30	65	30	18	70		20	63	62	63	102	118,5
1.80	1	160	320	65	35	84	35	20	85		25	75		74,5	119,5	137,5
2.96	2	325	650	80	45	102	45	24	100		35	82		93	146	164
3.116	3	450	900	95	50	122	50	26	115		42	104	97	100	159	177
4.138	4	525	1050	105	60	143	56	28	139,5	135	50	128	117	110,5	184	205
▲ **5.172**	6	1040	2080	135	70	178	100	35	172	165	65*	157	145	147	247	272

TECHNICAL DETAILS

Size		Clamp hub		Misalignments			Rigidity			Inertia coupling side *[Kgm²]*	Max speed *[Rpm]*	Weight *[Kg]*
DSS/SG	GAS SG	Screw	Tightening torque *[Nm]*	Angular α *[°]*	Axial X *[mm]*	Radial K *[mm]*	Torsional *[Nm/rad]*	Axial *[mm]*	Radial *[mm]*			
00.47	00	M5	8,7	0° 54’	1,2	0,06	980	2340	2000	0,00013	4000	0,4
0.63	0	M6	15		1,4	0,10	3650	8100	2900	0,00040	4000	0,7
1.80	1	M8	36		1,5	0,11	4180	10700	3650	0,00107	3000	1,7
2.96	2	M8	36		1,8	0,12	8150	21850	5000	0,00296	2500	1,9
3.116	3	M10	70		2,0	0,15	15000	34000	5900	0,00559	2000	3,2
4.138	4	M12	121		2,1	0,16	16000	49000	6800	0,01213	1200	5,8
▲ **5.172**	6	M12	121		2,6	0,18	38000	97000	6400	0,04301	800	13

TRANSMITTABLE TORQUE WITH CLAMP HUB ASSEMBLY

Size	Transmission torque *[Nm]* according to the ø finished bore *[mm]*																									
	10	**11**	**12**	**14**	**15**	**16**	**18**	**19**	**20**	**22**	**24**	**25**	**28**	**30**	**32**	**35**	**38**	**40**	**42**	**45**	**48**	**50**	**55**	**60**	**65**	**70**
00 (19)	46	47	48	50	52	53	55	56	58																	
0 (24)			76	78	80	81	84	85	87	89	92	93	97	100												
1 (28)							165	167	170	175	179	182	189	194	199	207										
2 (38)									199	204	209	212	219	224	229	237	244	249	254	262						
3 (42)												320	330	337	343	353	363	370	376	386	396	403				
4 (48)																			1640	1677	1714	1738	1800	1861	1922	
▲ **6 (55)**																				1824	1861	1885	1947	2008	2069	2130

▲ On request

NOTES

- **D H7*:** finished bore max = 55 H7 for positive version with shrink disk.
- These details refer only for the coupling (GAS/SG with backlash free red element 98 Shore-A), for torque limiters details see on page 34-37.
- Weights are relevant only to the pilot bore (GAS/SG); inertias refer only the coupling with maximum bore (GAS/SG).
- Microswitches EM1 or EM2 and inductive sensor PRX see page 73

HEXELUS
ComInTec®

... + GSF - model with bellows coupling: technical data

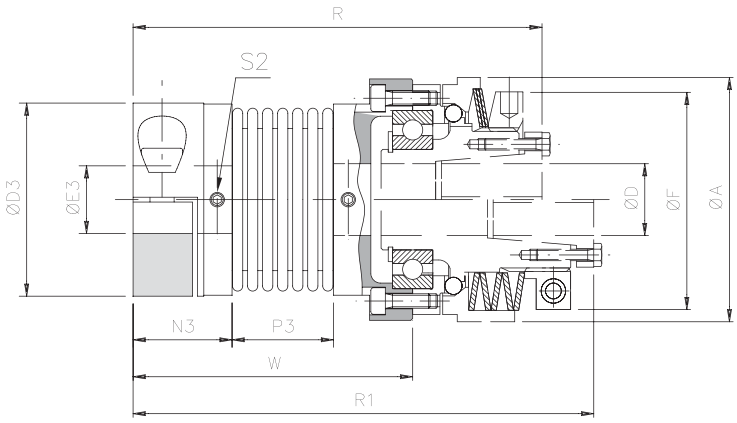

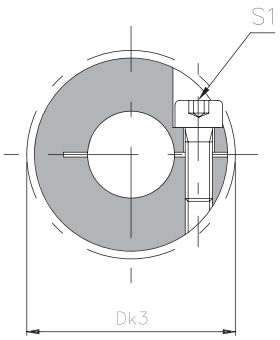

DIMENSIONS

Size		D3	Dk3	E3 H7		N3	P3	A	F	D H7	R	R1	W
SG	GSF			min.	max.								
00.40	1	34	36	5	16	17	16,5	44	38	12	72	84	48
00.47	2	40	44	8	20	20,5	21	50	42	17	87,5	102,5	58
0.63	3	55	58	10	30	22,5	27	70	62	20	107,5	124	68,5
1.80	4	65	73	14	38	26	32	85	75	25	126	144	81
2.96	5	83	89	14	45	31	41	100	82	35	155	173,5	102

TECHNICAL DETAILS

Size		Torque *[Nm]*		Weight *[Kg]*	Inertia *[Kgm²]*	Max speed *[Rpm]*	Grubscrews S1	Screws S2	Tightening torque		Misalignments			Rigidity		
SG	GSF	Nom	Max						Grubscr. (S2) *[Nm]*	Screws (S2) *[Nm]*	Angular α *[°]*	Axial X *[mm]*	Radial K *[mm]*	Torsional R_T *[Nm/rad • 10³]*	Axial R_A *[N/mm]*	Radial R_R *[N/mm]*
00.40	00	5	10	0,07	0,000024	4000	M4	M3	2,9	0,8	1° 30'	±0,5	0,20	3,050	30	92
00.47	0	15	30	0,14	0,000050	4000	M5	M3	6	0,8	1° 30'	±0,6	0,20	7,000	45	129
0.63	1	35	70	0,29	0,000229	4000	M6	M4	10	2	2°	±0,8	0,25	16,300	69	160
1.80	2	65	130	0,45	0,000622	3000	M8	M4	25	2	2°	±0,8	0,25	33,000	74	227
2.96	3	150	300	0,93	0,000834	2500	M10	M4	49	2	2°	±1,0	0,30	64,100	87	480

TRANSMITTABLE TORQUE WITH LOCKING ASSEMBLY

Size	Transmission torque *[Nm]* according to the ø finished bore *[mm]*																							
	5	**6**	**7**	**8**	**9**	**10**	**11**	**12**	**14**	**15**	**16**	**18**	**19**	**20**	**24**	**25**	**28**	**30**	**32**	**35**	**38**	**40**	**42**	**45**
1	5	6	7	8	9	10	11	12	14	15	16													
2				13	14	15	18	19	22	24	25	29	30	32										
3							25	27	32	34	36	41	43	45	54	57	63	68						
4												75	79	83	100	104	116	124	133	145	158			
5														132	158	165	183	198	211	231	248	263	277	295

NOTES

- These details refer only for the coupling (GSF), for torque limiters details see on page 34-37.
- Weights are relevant only to the pilot bore (GSF); inertias refer only the coupling with maximum bore (GSF).
- Microswitches EM1 or EM2 and inductive sensor PRX see page 73

ComInTec®
HEXELUS

OTHER COUPLING ON REQUEST

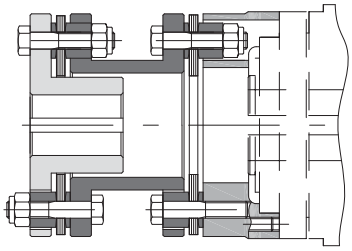

*Model **DSS/SG** with double flexing torsionally rigid metal disc coupling **GTR/D** when torsional rigidity is required and ability to accommodate radial misalignment.*

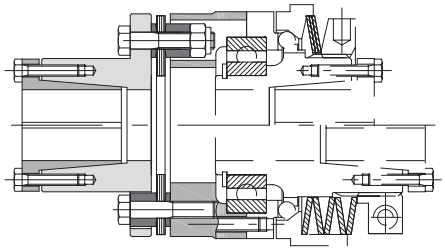

*Model **DSS/SG** with single flexing disc coupling **GTR/S** for applications where torsional rigidity is required.*

ORDER EXAMPLE

BACKLASH FREE TORQUE LIMITER					
Size	Model	.../Version	● Finished bore	Execution	Torque/Springs
2.96	**DSS/SG**	**-**	**ø30 H7**	**with keyway**	**350 Nm**

+

COUPLING			
Mod.	Elastic element	Finished bore	Hub Type
GAS	**Backlashfree red element 98 Sh-A**	**ø38 H7**	**A1**

Size
00.40 - 5.172

Execution
with keyway
with locking assembly

Springs
T1
T2
T3
T4

Model	
GAS	jaw elastic coupling
GSF	bellows coupling

Model	
DSS/SG	Backlash free ball torque limiter
DSS/F/SG	Backlash free ball phase torque limiter

.../Version	
.../P	positive version
.../N	negative version
.../ML	with long hub
8C	on request version “8 holes”

Locking type
See hub connection type list on page 4

● Model available only with finished bore.

TORQUE LIMITER FREE ROTATION

(SAFETY COUPLINGS)

Up to 1.200 Nm of torque and 65 mm bore

DSS/SG/RF

ComInTec®
Technology for Safety

HEXELUS

DSS/SG/RF - torque limiter free rotation: introduction

- Absence of torsional play during the transmission of motion.
- Fine-tuning the torque through a balanced radial ring.
- Motion transmission through balls.
- An innovative calibration system with “H dimension” for an immediate calibration of the equipment.
- Manual re-engagement.
- No residual torque after disengagement.
- Possibility of combining a switch / proximity to stop the engine.

ON REQUEST

- Complete transmission gear worked and fitted (crown, pulley, gear, ...).
- Can be supplied with various types of rigid/elastic couplings for in-line shafts transmission.
- Possibility of surface treatments for corrosion-specific needs.
- Possibility of connection with 8 holes interchangeable with other products on the market.

A backlash free Safety coupling with free rotation and low residual torque suitable for high speed transmission. The disengagement is instantaneous once the torque is reached, the calibration is adjusted by changing the pressure of the springs. The re-engagement is manual, quick and reliable.

APPLICATIONS

- Extruders.
- Packing machines.
- Automation technology.
- Test benches.

ADVANTAGES AND BENEFITS

- Protect the elements of a transmission even in case of high inertias.
- Protect the product from shock or incorrect positioning.
- Protect devices during transmission at high speeds of rotation.
- Greater durability of all devices, thanks to the free rotation.

	.../DSS/SG/RF: version suitable for immediate release to overcome Torque calibration; low residual torque after disengagement.	from 10 to 1200 Nm 65 mm max bore	Pag. 46
	... + GAS/SG: connection with flexible coupling and locking clamp for quick installation.	from 10 to 1200 Nm 70 mm max bore	Pag. 48

ASSEMBLY EXAMPLES

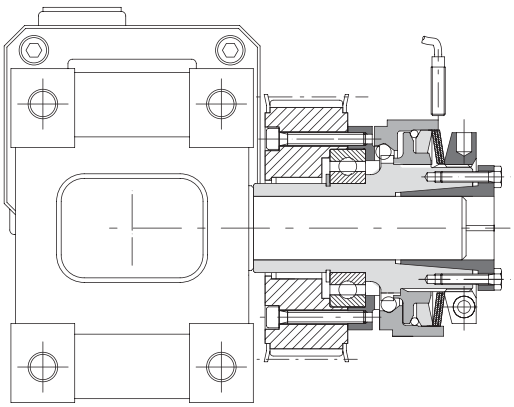

*Version **DSS/SG/RF/ML** with toothed pulley for transmission to parallel shafts.*

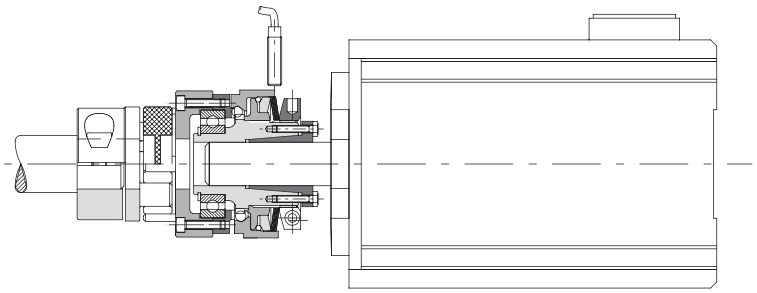

*Model **DSS/SG/RF** with elastic coupling **GAS/SG** for transmissions to coaxial shafts.*

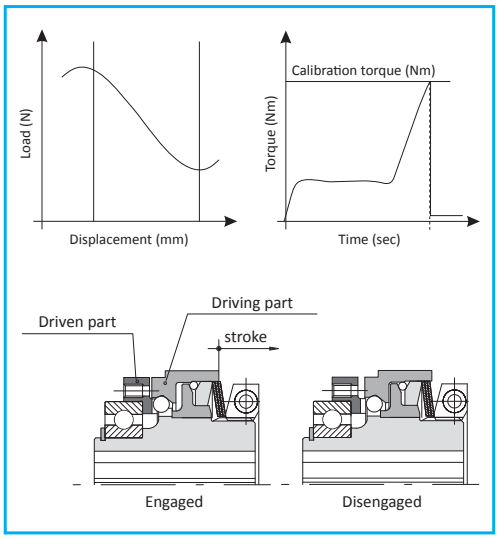

OPERATION

This model of torque limiter negative version to incorporate the following features:

- Backlash free with compact dimensions
- Instantaneous reduction of the couple at the time of overloading
- Absence of residual torque, after disengagement
- Immediate response times and high sensitivity

Suitable for protecting against overloads within automatic machines with significant powers and inertias and high rotation speeds. When an overload occurs an immediate and complete separation of the drive and driven occurs and will remain disconnected in free rotation until it is re-engaged manually or using a suitable tool.
A possible micro switch or sensor detects the movement of the movable base by generating an electrical signal necessary to stop the transmission. This electrical signal can also be used for further control functions.
Electromechanical microswitches model EM1 or EM2 or inductive sensors model PRX, available from Comintec.

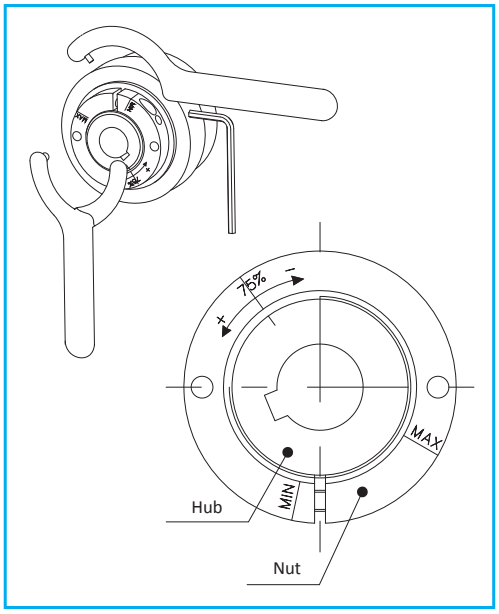

TORQUE ADJUSTMENT

Adjustment of the Negative version is opposite to all other units in our range. Unlike the traditional units, by rotating the adjuster nut clockwise the disengagement torque will reduce, and therefore to increase the torque the nut must be rotated anti-clockwise. To assist the operator in setting, there are clear markings on the nut showing 75% of the max torque and +/- Min/Max directions indicated.
Unless otherwise requested, these models are supplied pre-calibrated at 75% of the maximum torque value of the spring's chosen configuration.

HOW TO USE AND ASSEMBLE

The device is supplied ONLY with finished bore in the hub, unless otherwise specified, with tolerance H7 and keyway according to UNI 6604 (DIN 6885-1) with tolerance H9, H7 tolerance or without keyway with integrated locking assembly.
The device can be fixed axially by a screw and washer for the version with hole and keyway or by the locking device integrated in the version without key. They can be used, on request, also conical rings. The device is NOT self-supporting so it is necessary to provide that the shofts on which it will be fitted are with bearings and are supported in the case of the application are met with coupling misalignment shown in the catalog.

MAINTENANCE

These devices, mechanical, are maintenance-free.
In the case of the torque is appropriate to take account of different variables that combined together can affect the length of the limiter:
- Torque intervention in relation to the range provided by the limiter.
- Whether the frequency and duration of interventions.
- Ability to dissipate heat generated by the sliding.
- Speed of rotation.
- Environmental working conditions.

DSS/SG/RF - torque limiter free rotation: technical data

- Simple manual re-engagement without special equipment.
- Suitable to be installed in the kinematic chains with high inertia.
- Available with extended hub for assembly of wide organs: ... / ML.
- Organ mounted and directly supported by a ball bearing.
- Model available only with finished bore (with keyway or with locking assembly).
- Torque range: 25-1200 Nm; ø65 mm maximum bore.

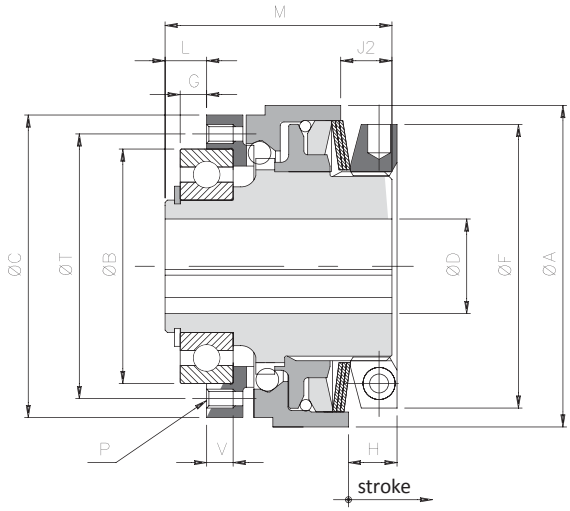

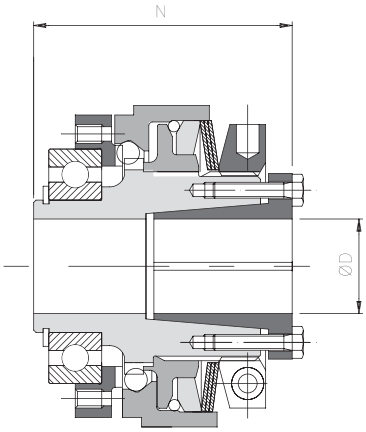

DIMENSIONS

Size	A	B h5	C	D H7 Max.	F	* G	L	J2	P	M	N	T	V	On request "8C" B h5	C	G	L	P	T	V
0.63	70	42	65	20	62	4	7	12	6xM5	50	57	48	7	47	-	5	8	8xM4	56	6
1.80	85	62	80	25	75	7	11	13,5	6xM5	60	68	70	7	-	-	-	-	8xM5	71	-
2.96	100	75	96	35*	82	9	14	16	6xM6	70	78	89	9	-	95	-	-	8xM6	85	-
3.116	115	90	115	42	97	8	14	17	6xM8	80	89	105	12	-	110	10	16	8xM6	100	10
4.138	135	100	138	50	117	6,5	14,5	20,5	6xM10	95	106	125	14	-	130	10	18	8xM8	116	11
▲ **5.172**	165	130	172	65	145	11	20	33	6xM12	120	135	155	18	-	166	12	21	8xM10	150	15

TECHNICAL DETAILS

Size	Torque *[Nm]* T1	T2	T3	T4	Stroke *[mm]*	Locking assembly Screws	Tightening torque *[Nm]*	Inerzia *[Kgm²]* Flange side	Nut side keyway	Nut side Locking assembly	Max speed *[Rpm]*	Weight *[Kg]* cava	Locking assembly
0.63	10 - 22	20 - 30	30 - 50	-	1,8	6xM4	4,1	0,00008	0,00039	0,00040	8000	1,2	1,2
1.80	20 - 40	35 - 70	55 - 100	-	2	8xM4	4,1	0,00029	0,00115	0,00118	7000	2	2,1
2.96	40 - 70	70 - 105	100 - 150	120 - 200	2,5	10xM4	4,1	0,00068	0,00257	0,00264	6000	3,6	3,8
3.116	70 - 150	150 - 220	200 - 350	280 - 400	4	8xM5	8,5	0,00129	0,00473	0,00493	5000	5,0	5,4
4.138	150 - 280	280 - 380	350 - 550	350 - 700	4,5	8xM6	14	0,00315	0,01083	0,01132	4000	8,7	9,3
▲ **5.172**	300 - 450	450 - 600	580 - 950	700 - 1200	5	8xM8	35	0,01012	0,03302	0,03380	3500	13,0	13,4

NOTES

▲ On request

- **DH7*:** maximum diameter for finished bore with reduced keyway according to UNI 7510.
- **G*:** assembly tolerance +0,1.
- Weights are relevant to the pilot bore; inertias refer to the maximum diameter for finished bore of the torque limiter.
- Microswitches EM1 or EM2 and inductive sensor PRX see page 73

ComInTec®
HEXELUS

... + GAS/SG - model with jaw coupling and single split clamp hub type “B”: technical data

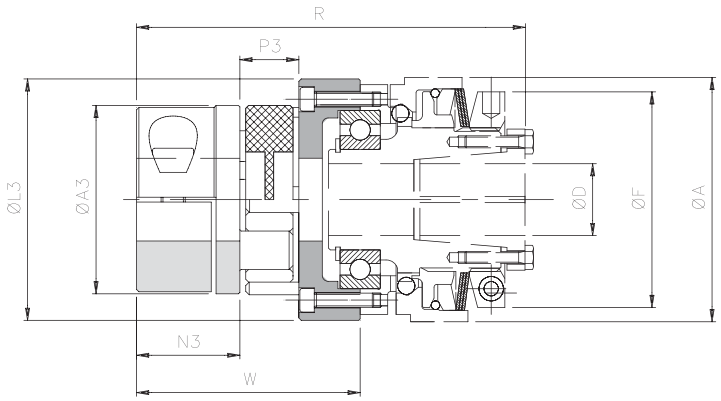

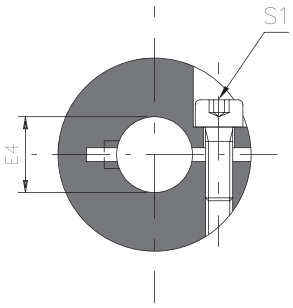

DIMENSIONS

Size /RF	Size GAS SG	Torque [Nm] Nom	Torque [Nm] Max	A3	E3 H7 max	L3	N3	P3	A	D H7 max	F	W	R
0.63	0	60	120	55	30	65	30	18	70	20	62	63	112
1.80	1	160	320	65	35	84	35	20	85	25	75	74,5	131,5
2.96	2	325	650	80	45	102	45	24	100	35	82	93	157
3.116	3	450	900	95	50	122	50	26	115	42	97	100	175
4.138	4	525	1050	105	60	143	56	28	135	50	117	110,5	204
▲ **5.172**	6	1040	2080	135	70	178	100	35	165	65	145	147	262

TECHNICAL DETAILS

Size /RF	Size GAS SG	Clamp hub Screws	Clamp hub Tightening torque [Nm]	Misalignments Angular α [°]	Misalignments Axial X [mm]	Misalignments Radial K [mm]	Rigidity Torsional [Nm/rad]	Rigidity Axial [mm]	Rigidity Radial [mm]	Inertia coupling side [Kgm²]	Max. speed [Rpm]	Weight [Kg]
0.63	0	M6	15	0° 54’	1,4	0,10	3650	8100	2900	0,00040	8000	0,7
1.80	1	M8	36		1,5	0,11	4180	10700	3650	0,00107	7000	1,7
2.96	2	M8	36		1,8	0,12	8150	21850	5000	0,00296	6000	1,9
3.116	3	M10	70		2,0	0,15	15000	34000	5900	0,00559	5000	3,2
4.138	4	M12	121		2,1	0,16	16000	49000	6800	0,01213	4000	5,8
▲ **5.172**	6	M12	121		2,6	0,18	38000	97000	6400	0,04301	3500	13

TRANSMITTABLE TORQUE WITH CLAMP HUB ASSEMBLY

Size	Transmission torque [Nm] according to the ø finished bore [mm]																							
	12	**14**	**15**	**16**	**18**	**19**	**20**	**22**	**24**	**25**	**28**	**30**	**32**	**35**	**38**	**40**	**42**	**45**	**48**	**50**	**55**	**60**	**65**	**70**
0 (24)	76	78	80	81	84	85	87	89	92	93	97	100												
1 (28)					165	167	170	175	179	182	189	194	199	207										
2 (38)							199	204	209	212	219	224	229	237	244	249	254	262						
3 (42)										320	330	337	343	353	363	370	376	386	396	403				
4 (48)																	1640	1677	1714	1738	1800	1861	1922	
▲ **6 (55)**																		1824	1861	1885	1947	2008	2069	2130

▲ On request

NOTES

- These details refer only for the coupling (GAS/SG with backlash free red element 98 Shore-A), for torque limiters details see on page 46.
- Weights are relevant only to the pilot bore (GAS/SG); inertias refer only the coupling with maximum bore (GAS/SG).
- Microswitches EM1 or EM2 and inductive sensor PRX see page 73

DSS/SG/RF - torque limiter free rotation: additional information

OTHER COUPLING TYPES AVAILABLE ON REQUEST

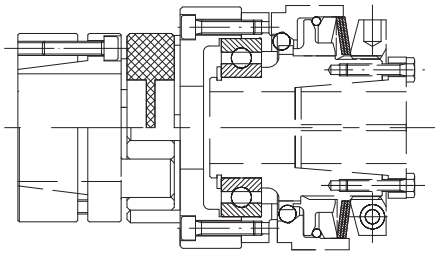

*Model **DSS/SG/RF** with backlash free jow elastic coupling **GAS/SG/CCE** with integrated locking assembly when is required to accomodate misalignment with high torsional rigidity.*

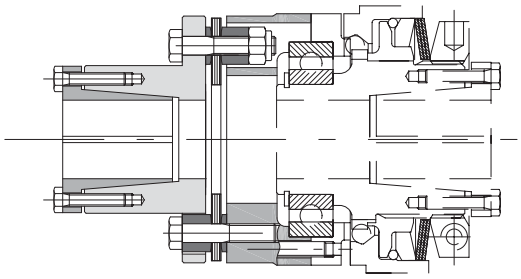

*Model **DSS/SG/RF** with single flexing disc coupling **GTR/S**, for applications where torsional rigidity is required.*

ORDER EXAMPLE

TORQUE LIMITER FREE ROTATION					
Size	Mod.	.../Version	Finished bore	Execution	Torque /spring
2.96	**DSS/SG/RF**	**-**	**ø30 H7**	**with keyway**	**350 Nm**

+

COUPLING			
Mod.	Elastic element	Finished bore	Hub type
GAS	**Backlashfree red element 98 Sh-A**	**ø38 H7**	**A1**

Size
0.63 to 5.172

Execution	Spring
with keyway	T1
with locking assembly	T2
	T3
	T4

Model	
GAS	jaw elastic coupling

.../Version	
-	base version
8C	on request version 8 holes
.../ML	with long hub

Model	
DSS/SG/RF	Free rotation ball torque limiter

Locking type
See hub connection type list on page 4

- Model available only with finished bore.

MODULAR TORQUE LIMITER

(FREE ROTATION)

Up to 9.000 Nm of torque and 140 mm bore

DSM

ComInTec®
Technology for Safety

HEXELUS

DSM - modular torque limiter (free rotation): introduction

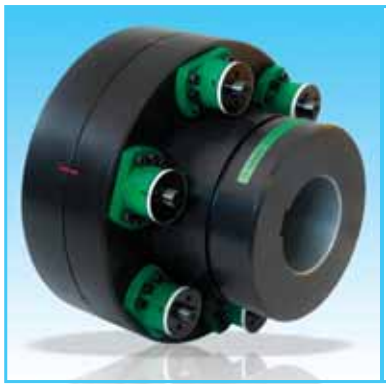

- Made in steel fully turned, with high mechanical strength.
- Free rotation after disengagement without residual torque.
- Reliable and maintenance free.
- Protected from external agents.
- Suitable for high rotation speeds and high inertias.
- Simple system of calibration and re-engagement.
- Compact and robust design.

ON REQUEST

- Overload signal ring (.../SI).
- Possibility of fitting with finished bore and keyway or locking assembly.
- Custom solutions for specific applications.
- Possibility of surface anticorrosive treatments for specific requirements.

A robust torque limiter with modular torque adjustment. Free rotation after overload permits high rotational speeds with also high torque settings and large shaft diameters can be accommodated.
The torque modules can be individually adjusted and re-engagement of the unit is quick and easy.

MAIN APPLICATION

- Extruders and mills.
- Mining industry and transporters.
- Heavy industry.
- Earthmoving machines and shredding/crushing machines.

ADVANTAGES AND BENEFITS

- Product protection in case of overload.
- Protection of operating units of machines in case of a collision.
- Protection of the drive from external overloads.
- Protecting conveyor belt stoppages.

	DSM: basic model for transmission to parallel shafts with plate wheel, gear or pulleys.	From 200 to 9000 Nm of torque 140 mm max. bore	Page 51
	... + GAS: coaxial connection with elastic coupling to absorb start-up torque and vibration.	From 200 to 9000 Nm of torque 140 mm max. bore	Page 52
	... + GTR: coaxial connection with torsionally rigid disc coupling for backlash free transmission.	From 200 to 9000 Nm of torque 140 mm max. bore	Page 52

APPLICATION EXAMPLE

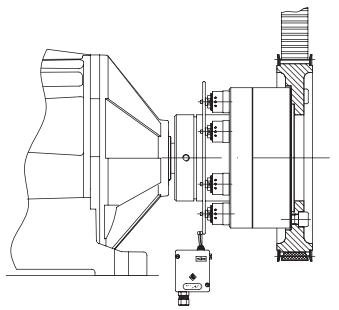

***DSM/SI** model with toothed pulley, complete with intervention signaling ring and electromechanical switch EM1.*

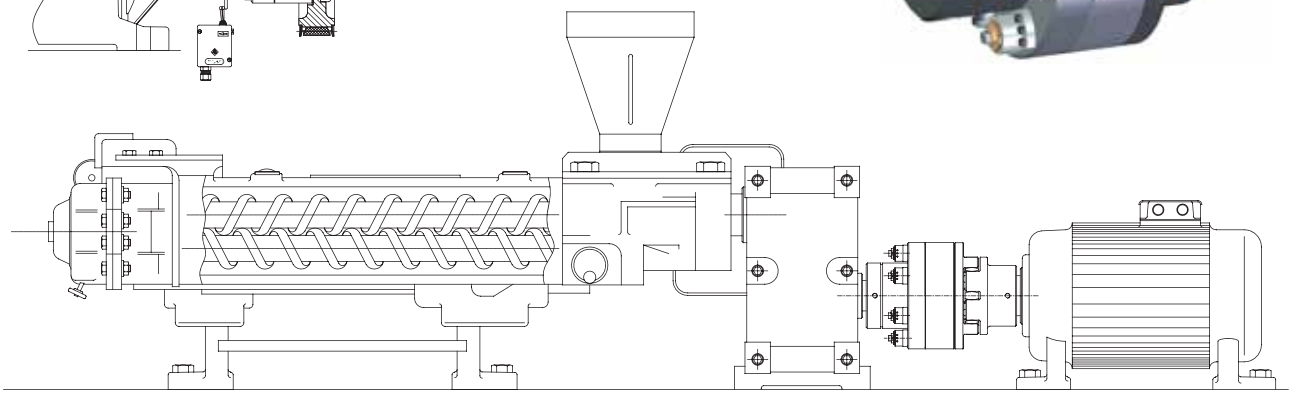

***DSM** torque limiter with coupling between motor and gearbox for extruder application*

DSM - modular torque limiter (free rotation): technical data

- Statically balanced with modules arranged symmetrically.
- Torsionally rigid.
- Module replacement without removing the device or other transmission components.
- Complete separation between the driven and driving part after disengagement.
- Integrated bearings for the support of the transmission.
- Torque range: 200 - 9.000 Nm; ø140 mm maximum bore.

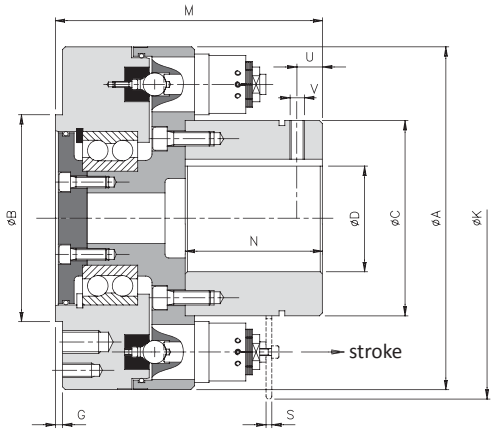

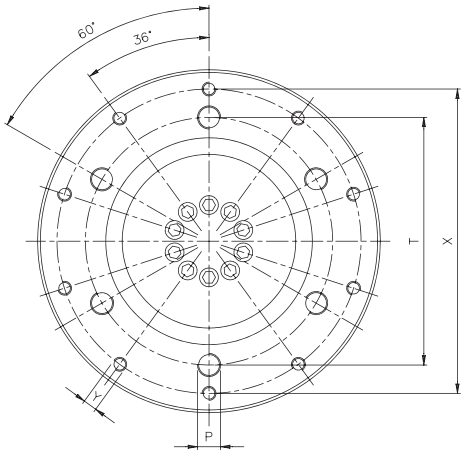

DIMENSIONS

Size	A	B h7	C	D H7 max	G	M	N	P	T	U	V	X	Y	On request	
														K	S
0	237	140	135	90	5	190	95	6xM16	170	18	M10	210	10xM10	250	4
1	270	175	165	110	5	220	110	6xM18	205	25	M12	245	10xM12	300	5
▲ **2**	350	220	215	140	5	300	145	6xM20	260	35	M16	310	10xM14	380	6

TECHNICAL CHARACTERISTICS

Size	Torque *[Nm]*			Stroke *[mm]*	Inertia *[Kgm²]*		Max speed *[Rpm]*	Weight *[Kg]*
	3 MD	6 MD	9 MD		Flange side	Hub side		
0	200 - 1200	400 - 2400	-	4	0,136228	0,103605	3000	42
1	325 - 1400	650 - 2800	975 - 4200	4	0,284825	0,193814	3000	55
▲ **2**	700 - 3000	1400 - 6000	2100 - 9000	5,5	1,128794	0,807608	3000	85

▲ On request

NOTES

- The weights and inertias refer to the torque limiter with maximum bore and 6 modules.
- Microswitches EM1 or EM2 and inductive sensor PRX see page 73

HEXELUS
ComInTec®

... + GAS - model with jaw coupling: technical data

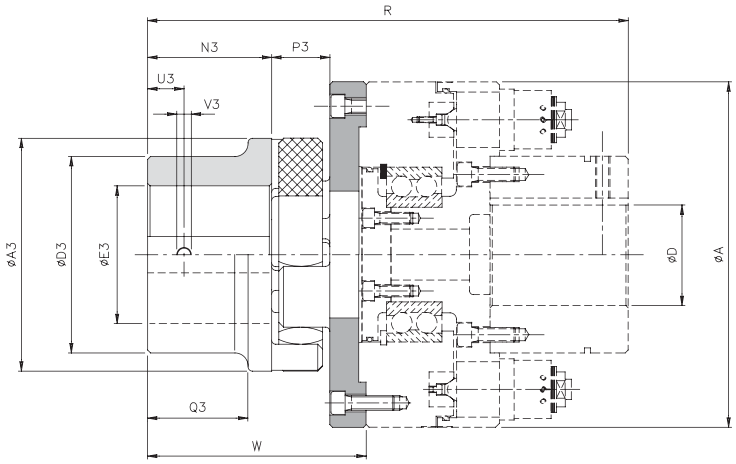

DIMENSIONS AND TECHNICAL CHARACTERISTICS

Size			Torque *[Nm]*		A3	D3	E3 H7 max	N3	P3	Q3	U3	V3	A	D H7 max	R	W	Misalignments			Speed *[Rpm]*	Weight *[Kg]*
DSM	GAS std	GAS ▲	Nom	Max													Angular α *[°]*	Axial X *[mm]*	Radial K *[mm]*		
0	7	8	1465	2930	160	135	95	85	40	69	25	M10	237	90	335	150	1° 18'	2,5	0,48	3000	10
1	8	10	3600	7200	200	160	110	100	45	81	30	M12	270	110	385	170	1° 18'	2,8	0,50	3000	15
▲ **2**	10	-	4800	9600	255	200	130	120	55	96	30	M12	350	140	500	205	1° 18'	3,2	0,55	3000	46

... + GTR - model with torsional rigid coupling: technical data

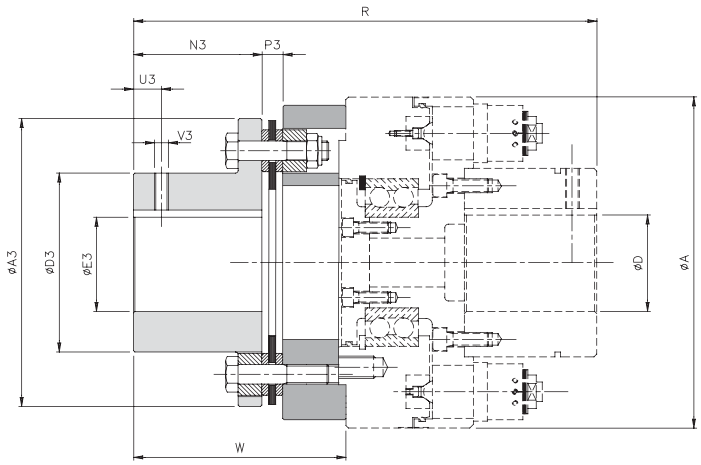

DIMENSIONS AND TECHNICAL CHARACTERISTICS

Size		Torque *[Nm]*		A3	D3	E3 H7 max	N3	U3	V3	A	D H7 max	R	W	Misalignments			Speed *[Rpm]*	Weight *[Kg]*
DSM	GTR	Nom	Max											Angular α *[°]*	Axial X *[mm]*	Radial K *[mm]*		
0	7	2600	5200	206	128	90	92	20	M10	237	90	337	152	0° 45'	2,2	-	3000	18
1	8	4000	8000	260	133	95	100	20	M10	270	110	390	175	0° 45'	2,4	-	3000	29
▲ **2**	10	9000	18000	296	170	120	120	25	M12	350	140	535	240	0° 45'	2,6	-	3000	51

NOTES

▲ On request

- ... + GAS: data relates to red normal elastomeric element 98 Sh-A (95 Shore-A for size 10).
- Data is relevant only to application (GAS, GTR), for torque limiter data see on page 51.
- Weights are relevant only to the coupling (GAS, GTR) with max bore.
- Microswitches EM1 or EM2 and inductive sensor PRX see page 73

- Made in steel fully turned with high mechanical resistance.
- Ease of registration.
- Ease of manual re-engagement.
- Mounted on DSM devices for a torsionally rigid transmission.
- Disengaging with complete detachment between the driving and driven side.
- Available in two sizes.

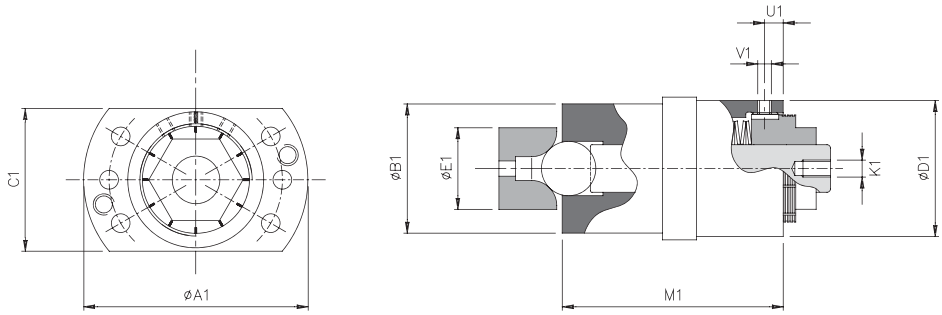

DIMENSIONS

Size		A1	B1 h7	C1	D1	E1 h7	K1	M1	U1	V1
DSM	MD									
0	**2**	66	38	42	40	24	M5	65	5,5	3xM4
1										
2	**3**	87	50	56	54	30	M8	95	5,5	3xM4

CALIBRATION

The key elements of the DSM module consist of the central piston (p) that will drive a hardened ball (s) into the location seat (t). Torque adjustment can be made also whilst the module is fitted to the torque limiter by the rotation of the hexagonal adjuster nut (r). Make sure that during the adjustment the fixing screw (u) is fully unscrewed to allow free rotation of the adjuster nut. The units are supplied as standard with the minimum possible torque setting but by rotating the adjuster nut clockwise the torque value will increase, and the setting can be monitored by viewing the adjustment notches located on the circumference of the adjuster nut. A complete revolution of the adjuster nut will equal one pitch. It is important once setting is completed to tighten the locking screw (u) in order to lock the adjuster nut in place. For more detailed setting instructions please see the fitting and setting instructions sheets available.

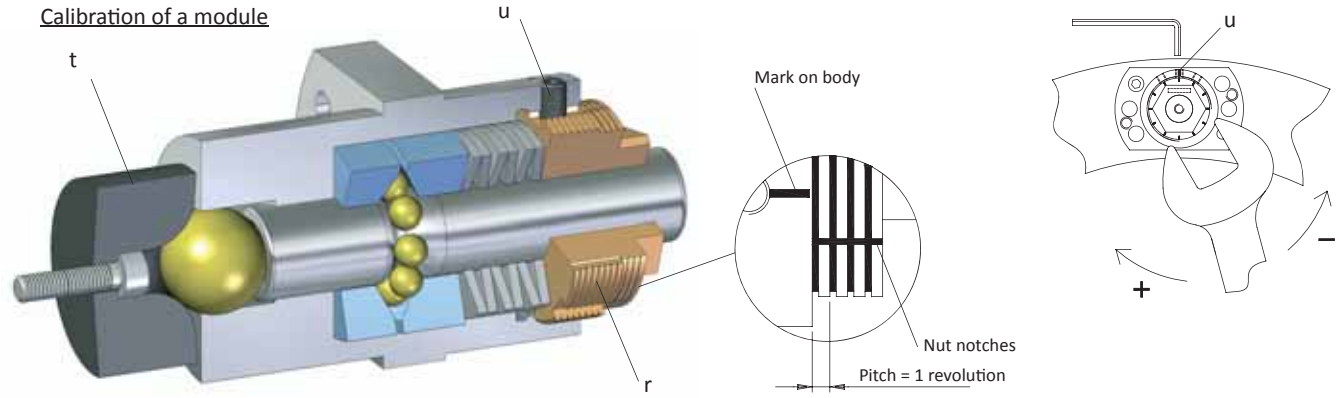

RE-ENGAGEMENT

The re-engagement of the limiter is manual and should only be performed with the device at rest.
Turn the fixed base (c) or the mobile base (d) so that the two reference marks are in line.
At this point, insert the pins of the related modules with slight but firm pressure using a tool or rubber mallet.

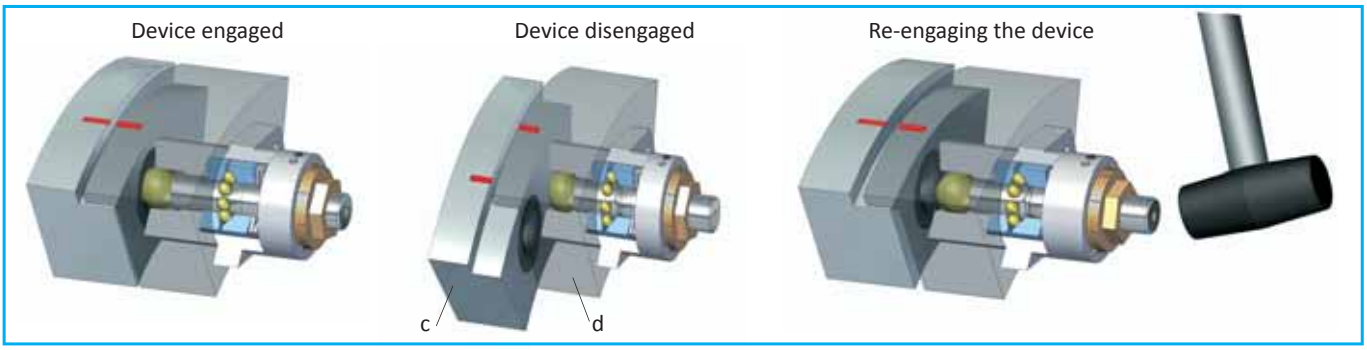

DSM - modular torque limiters (free rotation) : additional information

OPERATION

This model of freely rotating limiter DSM has been specifically designed to protect against overload in heavy industry machines with significant powers and inertia and high speed of rotation.
The seals present protect from dust, dirt and prevent leakage of grease used within.
In nominal operating conditions the transmission torque is transferred from the driving to driven components by a different number of modules assembled symmetrically on an outer circumference of the device with the possibility of different configurations of springs inside them.
In case of overload, when the torque demand from the driven portion exceeds that of calibration, the balls will be forced out of the seat area and by doing so axially move the central pistons within the modules. This release occurs instantaneously separating the driver and driven sections allowing free rotation of the section still rotating until the transmission is stopped.
The device can also be equipped with a overload detection ring (DSM/SI), connected to the central pivots of the various modules, to be able to “read”, through an electromechanical switch (model ComInTec: EM1) or an inductive sensor (model ComInTec: PRX), the axial movement and send an electrical signal to trigger an alarm and stop the transmission.
The re-engagement of the individual modules must be done with the machine stopped as described in the previous section devoted to it.

HOW TO USE AND ASSEMBLE

The device comes complete with finished bore, unless otherwise noted, with tolerance H7 and keyway DIN6885-1 with H9 tolerance.
The fixing of the device can be made axially through the bore with a washer or on request an internal locking assembly.
The device is NOT self-supporting so it is necessary to provide ensure that the shaft on which the device will be mounted are supported with bearings and in the case of shaft to shaft connection the misalignment values detailed in the catalogue are noted.

MAINTENANCE

These devices, are maintenance-free.
In the case of the torque calibration it is important to take into account several variables that combined together can affect the duration of the limiter:

- Torque value of intervention in relation to the actual range of the limiter.
- The frequency and duration of interventions.
- Ability to dissipate the heat generated by slippage or disengagement.
- Speed of rotation.
- Environmental conditions at work.

ORDER EXAMPLE

MODULAR TORQUE LIMITER

Size	Model	No. of modules	Finished bore	Torque
0	**DSM**	**6 modules**	**ø50 H7**	**1000 Nm**

Size
from 0 to 2

Model
DSM
DSM/SI

No. of modules
3 MD
6 MD
9 MD

+

DRIVE ELEMENT

Description
Pulley GT 14M-37 Z=72

COUPLING

Model	Elastic element	Finished bore	Hub type
GAS	**Normal red element 98 Sh-A**	**ø110 H7**	**A1**

Model	
GAS	Jaw coupling
GTR	Torsionally rigid disc coupling

Locking type
See hub connection type list on page 4

TORQUE LIMITER FOR GEARBOXES

(SAFETY COUPLINGS)

Up to 2.600 Nm of torque and 65 mm bore

.../PR

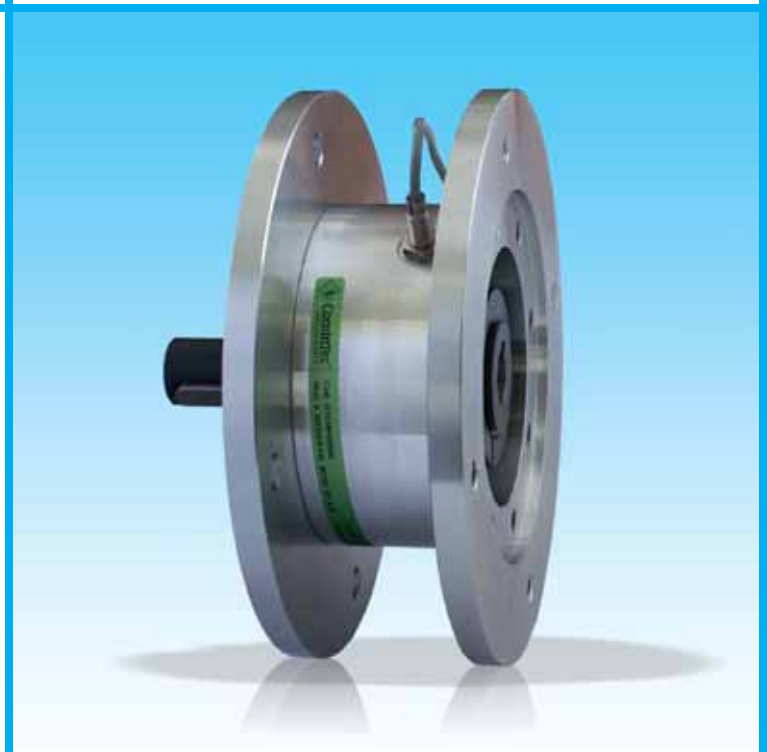

ComInTec®
Technology for Safety

HEXELUS

.../PR - torque limiter for gearboxes: introduction

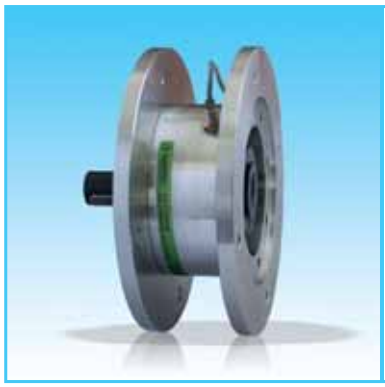

- Safety coupling made in steel fully turned with spacer fully turned.
- Standard treatment of phosphating on torque limiter.
- Compact solution.
- Model available for IEC motors.
- Protection in both directions.
- Instant disengagement upon overload.
- Fast and simple calibration using our “H” dimension procedure.

ON REQUEST

- Device calibrated and ready to use.
- Friction rings available in various materials and performance to suit specific needs.
- Customized versions possible and various anti-corrosive treatments available.
- Model available for NEMA motors in case of balls model.

Safety coupling to be mounted between the motor and gearbox with flanged B5 spacer. Available in sliding (DF/TAC/PR-V) and disengage versions (DSS/F/SG/PR-V). The location of the limiter between the motor and gearbox requires a smaller size of device with also reduces costs.

MAIN APPLICATION

- Conveyor.
- Packaging machines.
- Wrapping machines.
- Motorized systems of handling and positioning.

ADVANTAGES AND BENEFITS

- Simplicity and sensitivity compared to gearbox integrated solutions.
- Protect the motor-gearbox from accidental collisions or impacts from the products being processed.
- Greatly reduces production downtime in case of overload.
- Absorb static torques without disengaging (friction model).

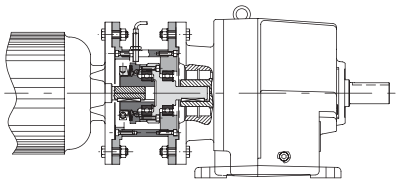	DSS/F/SG/PR-V: Backlash free balls model to fit between motor and gearbox.	From 3 to 720 Nm of torque 48 mm max. bore / shaft	Page 57
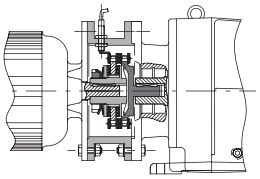	DF/TAC/PR-V: Friction model chain coupling version to fit between motor and gearbox.	From 1 to 1200 Nm of torque 55 mm max. bore / shaft	Page 58
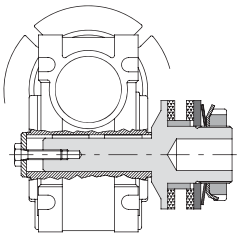	DF/PR: Friction model to assemble directly into the output of the hollow shaft gearbox.	From 1 to 2600 Nm of torque 65 mm max. bore 55 mm max. shaft	Page 59

DSS/F/SG/PR-V - backlash free balls model for gearboxes (input shaft): technical data

- Balls solution, torsional backlash free in negative version, maintenance free.
- Instant disengagement between driving part and driven part in the event of overload.
- Available with single point (360°) engagement.
- Complete solution with connecting flanges in GALVANIZED STEEL for IEC motors.
- Inductive sensor integrated for monitoring the overload.
- Torque range: 3-720 Nm; bore/shaft max ø48 mm.

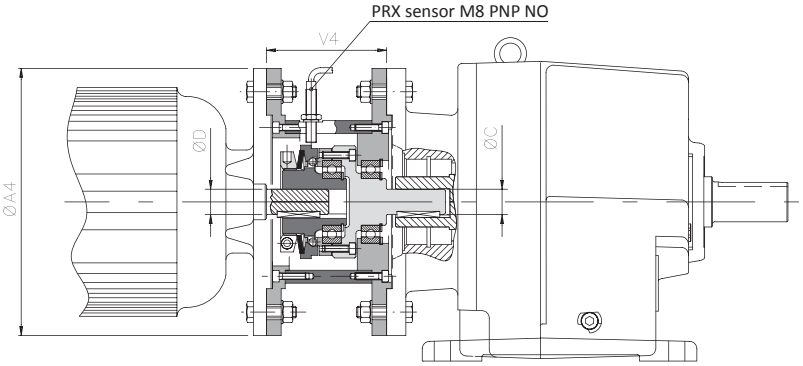

DIMENSIONS AND TECHNICAL CHARACTERISTICS

Size	Torque [Nm]				Motor IEC	DSS/SG/PR-V	B5 Flange		Max speed [Rpm]	Weight [Kg]
	T1	T2	T3	T4		D H7 - C h7	A4	V4		
00.47	3 - 7,5	5 - 15	8,5 - 23	-	63a	11	140	52,5	4000	3,5
					71a	14	160	54,5		4,2
0.63	5 - 14	12 - 28	24 - 50	-	80a	19	200	78	4000	8
1.80	9 - 28	18 - 60	40 - 100	-	90s	24	200	90	3000	9
2.96	20 - 45	42 - 95	-	85 - 200	100La - 112M	28	250	110	2500	17
▲ **3.116**	35 - 100	75 - 200	-	195 - 415	132M	38	300	110	2000	24
▲ **4.138**	75 - 190	140 - 345	-	245 - 720*	160L	42	350	126	1850*	33,5
					180L	48		126		36

FITTING EXAMPLE

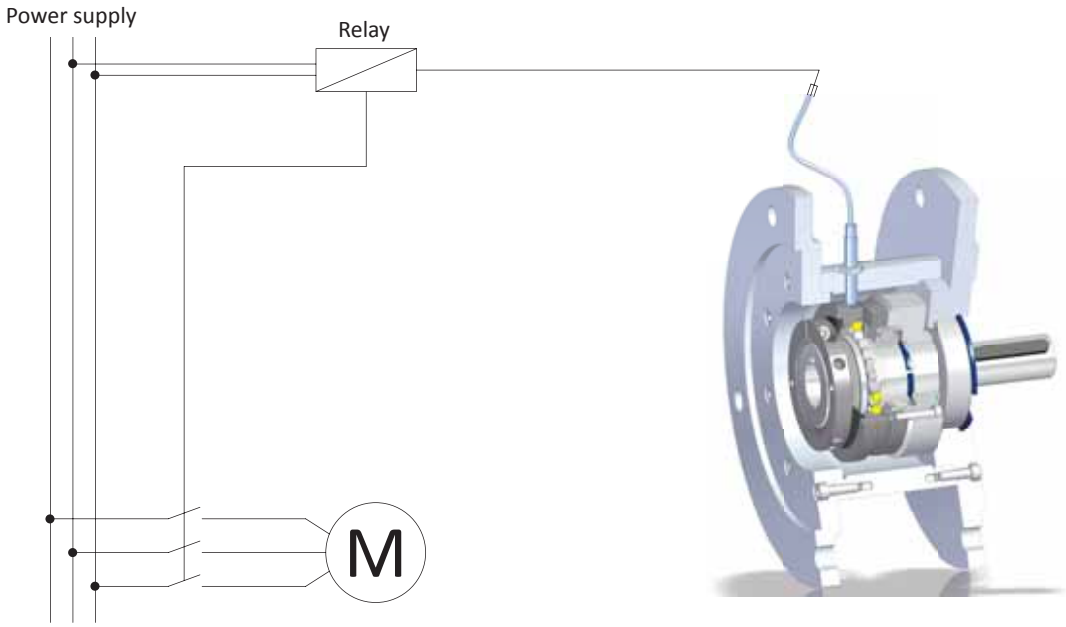

*Wiring diagram of the sensor **PRX** for intervention signalling on model **DSS/F/SG/PR -V***

▲ On request

NOTES

- **Max speed***: for size 4.138 DSS/F/SG/PR-V if used with the springs set T4 the maximum speed is 1500 Rpm.

HEXELUS
ComInTec®

DF/TAC/PR-V - friction model with chain coupling for gearboxes (input shaft): technical data

- Compact and economic solution.
- Sliding of the driving part to overcome the torque calibration without disconnecting the transmission.
- Silent intervention and vibration-free.
- Complete solution with connecting flanges in ALUMINUM for IEC motors.
- Possibility of integration of an inductive sensor for monitoring the overload (DF/TAC/PR-V/S).
- Torque range: 1-1.200 Nm; bore/shaft max: ø55 mm.

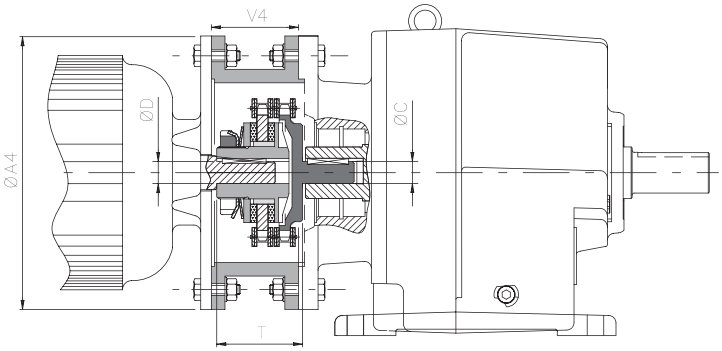

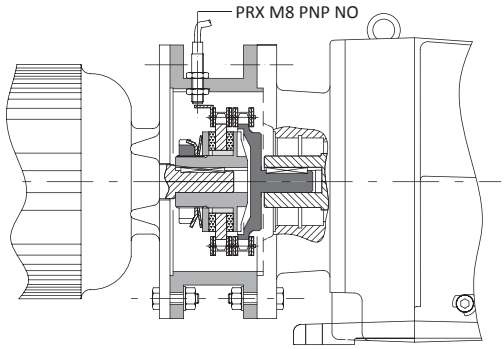

DF/TAC/PR-V (without sensor) → spacer **type A** (with inspection)
DF/TAC/PR-V (without sensor) → spacer **type B** (without inspection) ▲

DF/TAC/PR-V/S (with sensor) → spacer **type C** (with inspection)

DIMENSIONS AND TECHNICAL CHARACTERISTICS

	Size	Torque [Nm]				Motor IEC	DF/TAC/PR-V		Spacer for B5 flange		Max speed [Rpm]	Weight [Kg]	
		T0	T1	T2	T3		D H7 - C h7	T	A4	V4		limiters	spacer
	00.38	-	1 - 14	8 - 22	15 - 34	63a	11	43	140	43	5000	0,6	0,5
						71a	14 *		160				
	0.50	2 - 12	4 - 40	17 - 70	23 - 100	80a	19	45	200	45,5	3800	1	0,6
						90S	24 *			55,5		0,9	1
	1.70	6 - 18	17 - 60	34 - 120	60 - 210	100La - 112M	28	64	250	66	2800	2,6	1,8
	2.90	13 - 105	74 - 140	90 - 280	185 - 450	132M	38	72	300	83,5	2200	5,4	2,2
▲	**3.115**	65 - 280	120 - 360	207 - 700	210 - 950	160L	42	104	350	121	1800	10,2	3,6
						180L	48					10,4	5,8
▲	**4.140**	-	180 - 550	260 - 950	390 - 1200	200L	55	104	400	122	1500	18	9

FITTING EXAMPLES

*Model **DF/TAC/PR-V** for mounting between motor and gearbox complete with spacer type A and inspection.*

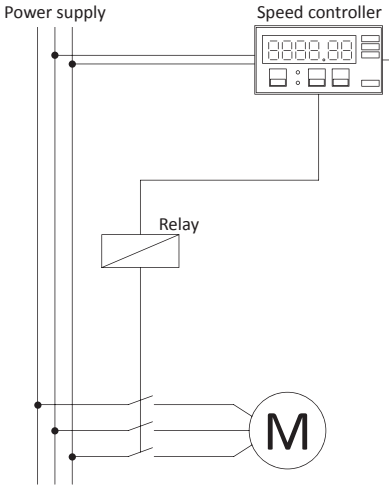

*Wiring diagram of the sensor PRX to intervention signaling on model **DF/TAC/PR-V/S**.*

NOTES

▲ On request

- D H7 *: reduced keyway on torque limiter.
- Weight refer to the torque limiter pilot bore.

ComInTec®
HEXELUS

DF/PR and DF/TAC/PR - friction model for gearboxes (output shaft): technical data

- Possibility of friction rings with different performance for specific needs.
- Specifically designed for installation on hollow output shaft gearboxes.
- Available complete with transmission component fully turned and fitted.
- Available with radial nut (.../GR) statically balanced.
- Model for gearboxes with a chain coupling, suitable for connections of coaxial shafts (DF/TAC/PR).
- Torque range: 1-2.600 Nm; max shaft: ø55 mm; max bore: ø65 mm.

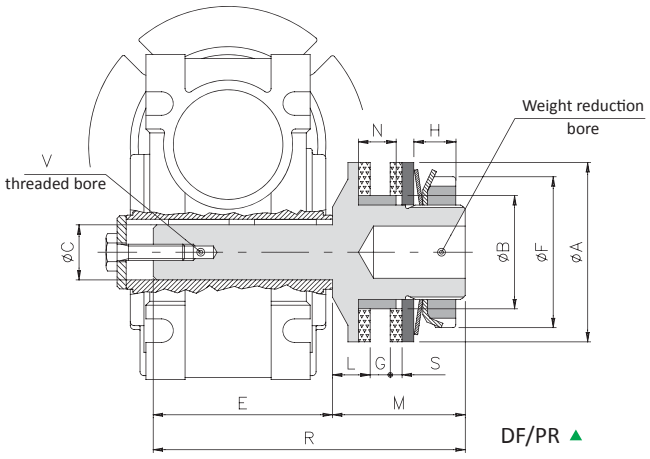

DF/PR ▲

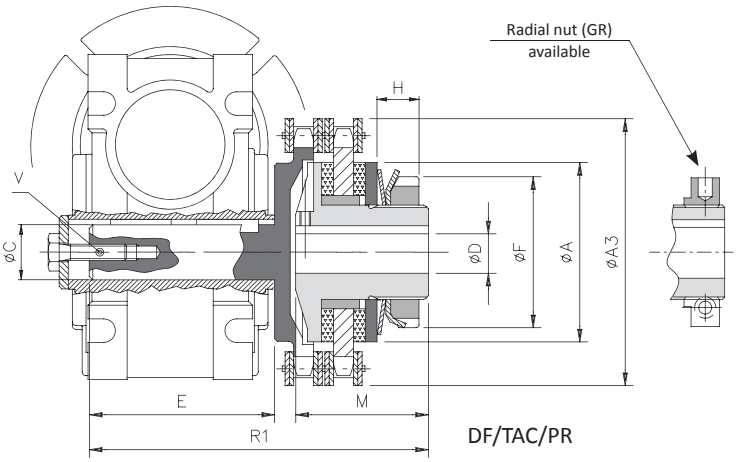

DF/TAC/PR

DIMENSIONS

Size	A3	A	B h7	C h7	D H7 max	E	F	G min	G max	L	M	N	R	R1	S	V
00.38	57	38	24	11	12	48	32	2,5	5	8	33	8	81	91	2,5	M4x10
0.50	75	50	36	14	20	53	44	3,5	6	10	35	10	88	98	3	M5x13
1.70	101	70	45	18	25	62	63	5	10	15	55	15	117	126	4	M6x16
				19		78							133	142		
				24		90							145	154		
				25		80							135	144		
2.90	126	90	60	25	38	90	82	7	12	16	60	17	150	164	4	M8x20
				28		110							170	184		
3.115	159	115	72	32	45	120	104	9	16	18	70	21	190	212	4	M10x25
				35		118							188	210		
				38		138							208	230		
4.140	184	140	85	42	55	152	130	13	19	20	80	25	232	258	5	M12x32
				45		163							243	269		
				48		178							258	284		
5.170	215	170	98	50	65	167	158	15	22	22,5	95	28	262	286	5	M16x40
				55		208							303	327		

TECHNICAL CHARACTERISTICS

Size	Torque *[Nm]*				Max speed *[Rpm]*		Weight *[Kg]*	
	T0	T1	T2	T3	DF/PR	DF/TAC/PR	DF/PR	DF/TAC/PR
00.38	-	1 - 14	8 - 22	15 - 34	10000	5000	0,2	0,6
0.50	2 - 12	4 - 40	17 - 70	23 - 100	7600	3800	0,4	1,0
1.70	6 - 18	17 - 60	34 - 120	60 - 210	5450	2800	1,2	2,8
2.90	13 - 105	74 - 140	90 - 280	185 - 450	4250	2200	2,2	5,7
3.115	65 - 280	120 - 360	207 - 700	210 - 950	3350	1800	3,9	10,7
4.140	-	180 - 550	260 - 950	390 - 1200	2750	1500	7,3	19,3
5.170	-	160 - 700	300 - 1450	1000 - 2600	2250	1300	12,1	29,8

▲ On request

NOTES

- Weight refer to the torque limiter pilot bore.

HEXELUS
ComInTec®

.../PR - torque limiter for gearboxes: additional information

ORDER EXAMPLE

TORQUE LIMITER FOR GEARBOXES				
Size	Model	Spacer	Shaft / Bore	Torque/Springs
0.50	**DF/TAC/PR-V**	**with type A spacer**	**ø28 h7/H7**	**T1**

+

DRIVE ELEMENT (ref. to DF/PR)
Description
Simple plate wheel 3/8” x 7/32” Z=22

Size
00.38 to 5.170
00.47 to 4.138

Model
DSS/F/SG/PR-V
● DF/TAC/PR-V
● DF/TAC/PR-V/S
DF/PR

● Spacer (ref. to TAC/PR-V)
Type A
Type B

Springs
T0
T1
T2
T3
T4

● DF/TAC/PR-V model is supply combined with the corresponding spacer (type A or type B)
DF/TAC/PR-V/S model is supply combined with the corresponding spacer (type C), complete with inductive proximity sensor (PRX).

PRX - inductive proximity sensor: technical data

- Standard version with brass cover with protection **IP67** DIN 40050.
- Electric contact 5 ÷ 24 VCC and working frequency 2000 Hz.
- Operating temperature from -20°C to +70°C.
- Output: NPN (N.O. - N.C.); PNP (N.O. - N.C.).
- Intervention distance: max 1 mm.
- Cable length: 2 meter (3x0,2).

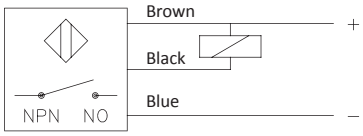

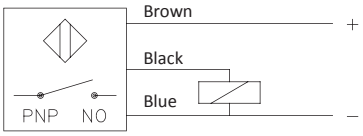

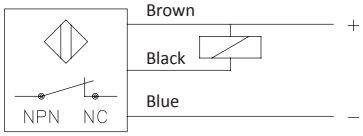

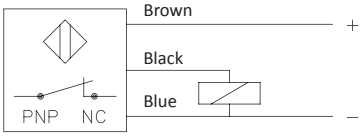

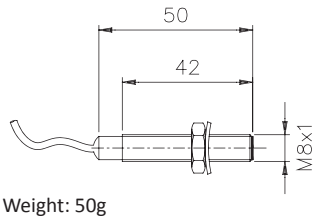

Weight: 50g

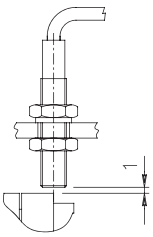

AXIAL FORCE LIMITER

Up to 4.700 N of force and 20 mm shaft

DSA

ComInTec®
Technology for Safety

HEXELUS

DSA - axial force limiter: introduction

- Axially backlash free.
- Protection in both tension and compression.
- Free movement in tension and compression after release.
- Automatic re-engagement in the exact position of disengagement.
- Innovative calibration system by “H dimension“ for an immediate calibration of the device.
- Made of steel fully turned with special high mechanical strength.
- No maintenance for high reliability in the time.

ON REQUEST

- Complete with drive rods and rod ends.
- Sensor or switch mounted in axial or radial position.
- Possibility of customization for specific applications.
- Possibility of surface treatments for corrosion-specific needs.

Safety coupling with linear limitation of force. Releasing both in compressive and tension once it reaches the calibration force. The setting force can be adjusted by turning the adjuster nut onto the springs and re-engagement is automatic. Possibility of connecting linear motion also very distant from each other.

MAIN APPLICATIONS

- Shaft mounted gearboxes.
- Cam/Eccentric movements.
- Transactions structured for pushers and slides.
- Crank mechanism.

ADVANTAGES AND BENEFITS

- Protect shaft mounted gearboxes overloads on the transmission.
- Protect slides or other moving parts from accidental shock or collision limit.
- Protect movements typically jams or improperly placements.
- Protect the final product from crushing or deformation.

ASSEMBLY EXAMPLES

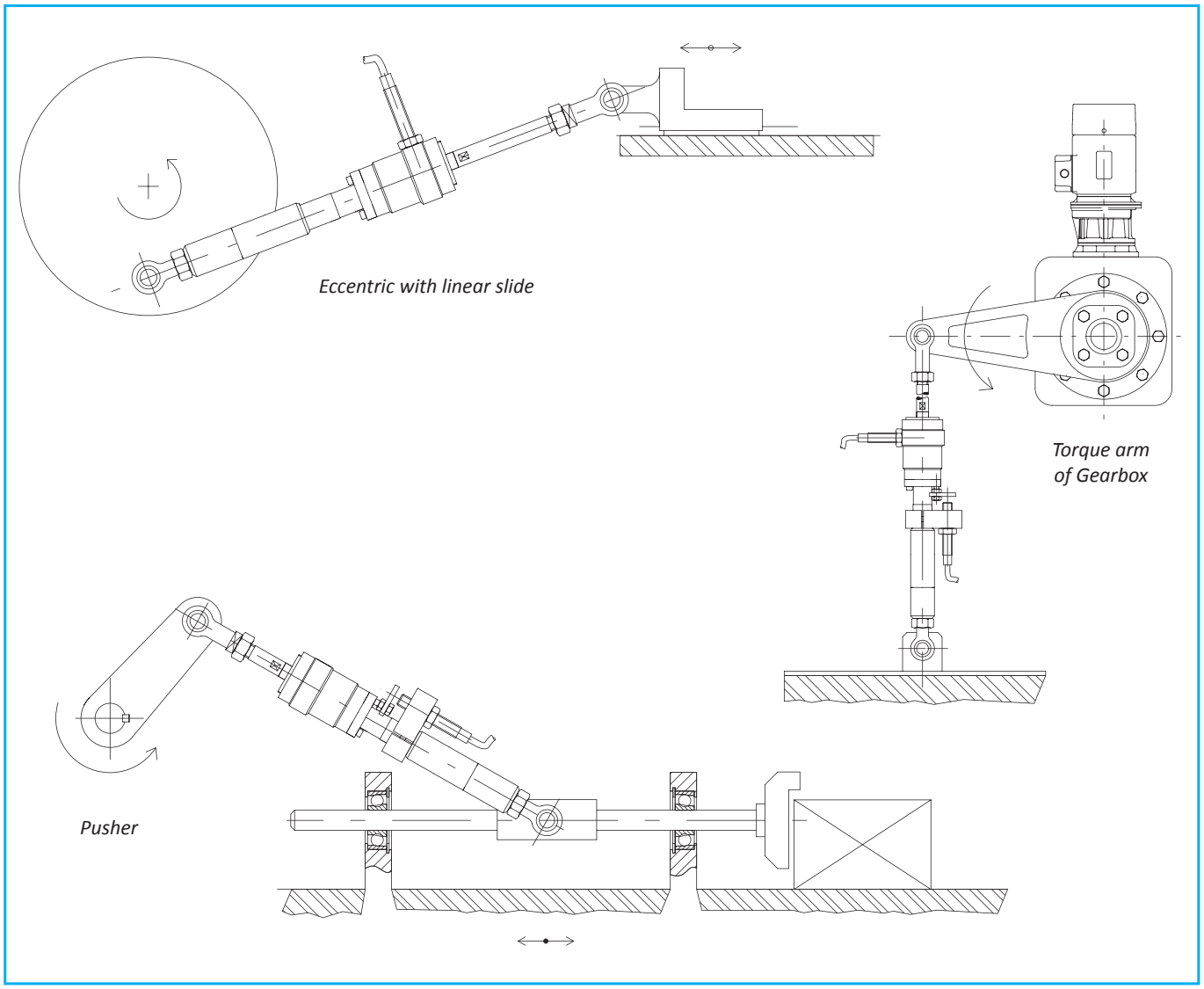

DSA - axial force limiter: introduction

- High axial stiffness.
- Compact.
- Immediate interruption of power in case of overload.
- Continuous adjustment of the intervention force.
- Possibility of mechanical limit to prevent the slipping of the central pin after disengagement.
- Force range: 25-4.700 N.

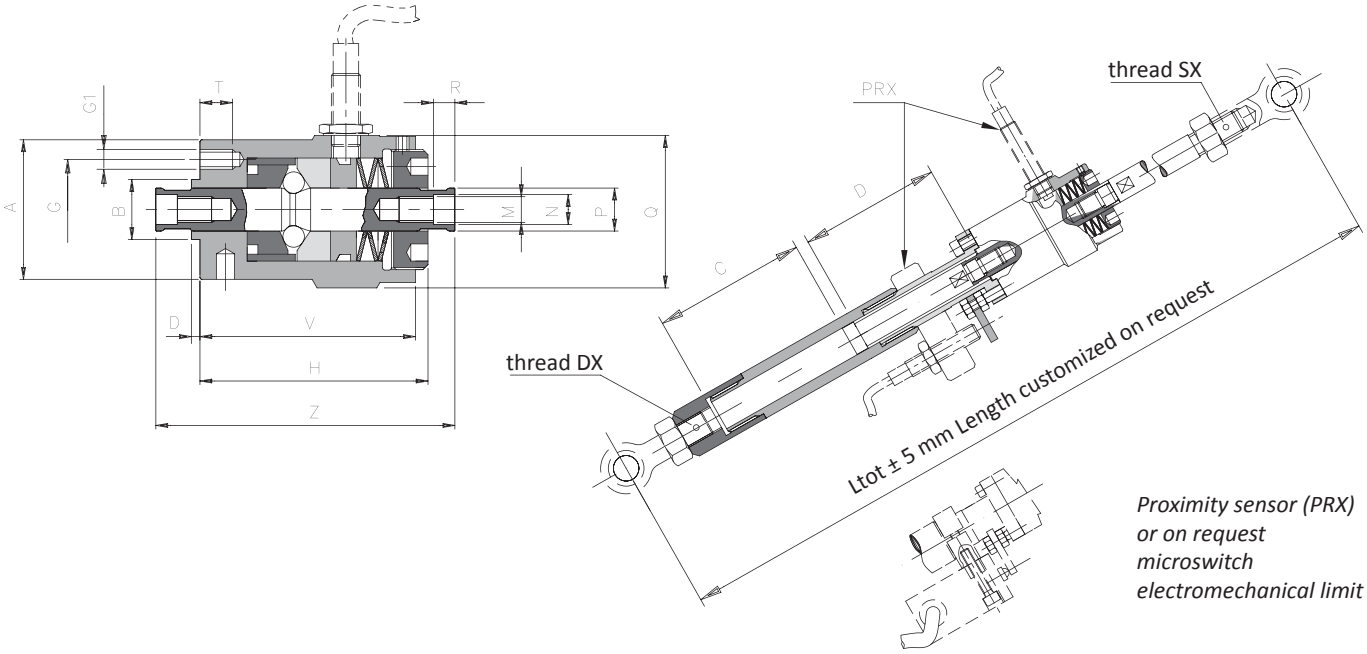

Proximity sensor (PRX) or on request microswitch electromechanical limit

DIMENSIONS AND TECHNICAL DETAILS

Size	Force [N]			A	B h7	D	G	G1	M	N h7	P	Q	R	T	V	Z	Weight [Kg]
	T0	T1	T2														
1	25 - 90	55 - 500	295 - 1300	30,5	14	2	22	6xM3	M6x0,75	7	10	36,5	5	7	50	66	0,3
2	-	320 - 1050	880 - 2850	38	18	2	28	6xM5	M10x0,75	11	14	42	9	10	61	85	0,5
3	-	530 - 2430	970 - 4700	50	25	3	37	6xM6	M12x1	13	20	56	10	11	78	105	1,1

PRX - inductive proximity sensor: technical data

- Standard version with brass cover with protection **IP67** DIN 40050.
- Electric contact 5 ÷ 24 VCC and working frequency 2000 Hz.
- Operating temperature from -20°C to +70°C.
- Output: NPN (N.O. - N.C.); PNP (N.O. - N.C.).
- Intervention distance: max 1 mm.
- Cable length: 2 meter (3x0,2).

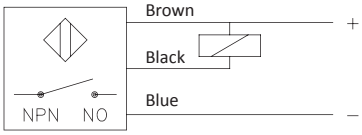

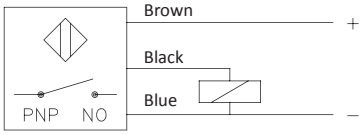

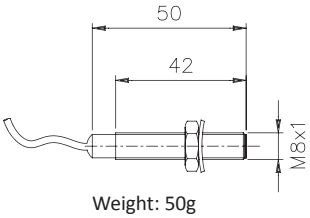

Weight: 50g

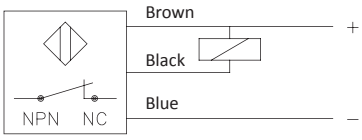

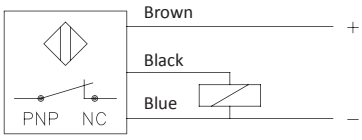

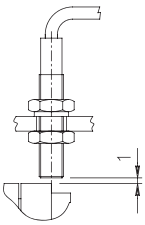

DSA - axial force limiter: additional information

ORDER EXAMPLE MODULE ONLY

AXIAL FORCE LIMITER		
Size	Model	Force / Springs
1	**DSA**	**T0**

+

SENSOR
Description
PRX M8 NPN NO

Size
from 1 to 3

Springs
T0
T1
T2

ORDER EXAMPLE COMPLETE GROUP

AXIAL FORCE LIMITER					
Size	Model	Force / Springs	Compression Stroke / Traction Stroke	Ltot	Rod ends
1	**DSA**	**T0**	**50 mm / 50 mm**	**302 mm**	**M8**

+

SENSOR / MICROSWITCH
Description
PRX M8 NPN NO

Size
from 1 to 3

Springs
T0
T1
T2

PNEUMATIC CLUTCHES (SAFETY COUPLINGS)

Up to 30.000 Nm of torque and 120 mm bore

AP

ComInTec®
Technology for Safety

HEXELUS

AP - pneumatic clutches: introduction

- Simple and precise calibration.
- Transmission engagement / disengagement and torque limiter functions (safety coupling).
- Reliability and repetitiveness of the calibration torque.
- Torque variation whilst in motion, by pressure regulation.
- Free rotation after the disengagement through a complete disconnection between the parts.
- Low residual torque on disconnected parts.
- Models available only with finished bore.

ON REQUEST

- Complete with transmission element machined and assembled (plate wheel, pulley, gear, ...).
- Can be supplied with various types of rigid/elastic couplings for in-line shafts transmission.
- Possibility of shaft connection with finished bore, locking assembly or other systems.
- Available in anti-corrosive version, with specific surface treatments.

A friction clutch or roller with torque adjustment even during operation. Ability to disengage the drive and driven by pneumatic or electrical impulse. Low residual torque after disengagement. Calibration adjustable by changing the pressure (pneumatic) air supply.

APPLICATION FIELD

- Machines with variable torque requirements.
- Test benches.
- Coiler and uncoilers.
- Cut format systems.

ADVANTAGES AND BENEFITS

- Engage/disengage different product transmission lines.
- Maintain tension of wire/film coils.
- Regulate different torques depending on the change of the format.
- Protect the motor gearbox against every form of overload.

	DSR/F/AP: Complete engagement-disengagementof the transmission, also for long periods	from 7 to 30000 Nm 120 mm max bore	Page 67
	DSR/F/AP + GEC: compact coaxial connection for simple maintenance without being forced to remove the coupling	from 7 to 30000 Nm 180 mm max bore	Page 68
	DSF/TF/AP: friction motion transmission as tensioner.	from 3 to 875 Nm 65 mm max bore	Page 69
	DSF/TF/AP/TAC: simple and economic coaxial shaft connection.	from 3 to 875 Nm 80 mm max bore	Page 70

ASSEMBLY EXAMPLES

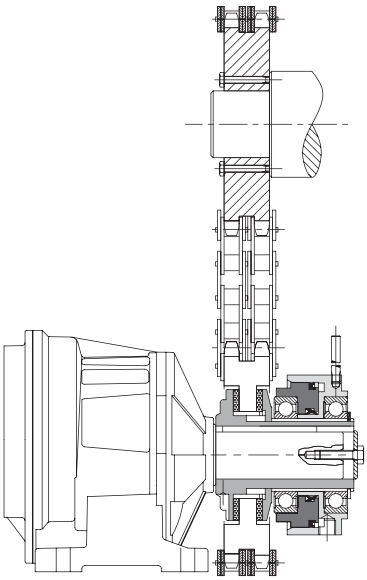

*Model **DSF/TF/AP** with plate wheel for parallel shaft transmission.*

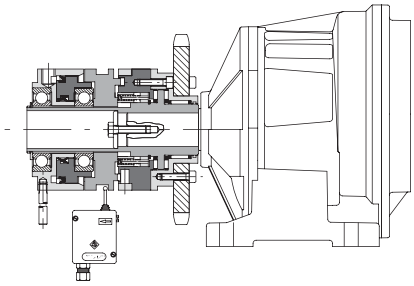

*Model **DSR/F/AP** with plate wheel for parallel shaft transmission.*

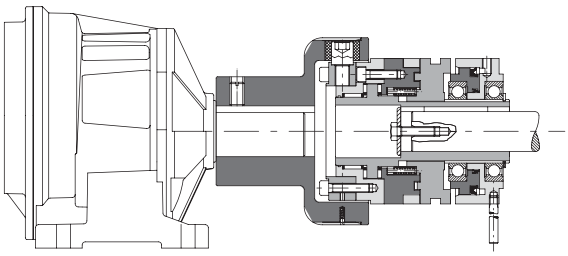

*Model **DSR/F/AP** Compact elastic coupling **GEC** for coaxial shaft transmission.*

NOTES

- Avoid rigid locking of the anti-rotating pin of the cylinder as it can cause imbalances during rotation

DSR/F/AP - roller phase pneumatic clutch: technical data

- Transmission through rollers with re-engagement in phase 360° (equidistant on request, 30°, 45°, …).
- Free rotation for long periods after overload: … / CS.
- Suitable for high rotation speeds.
- Maintenance free for high reliability.
- Arranged to add a microswitch / proximity to stop the motor drive.
- Torque range: 5 – 30.000 Nm; max. bore ø120 mm.

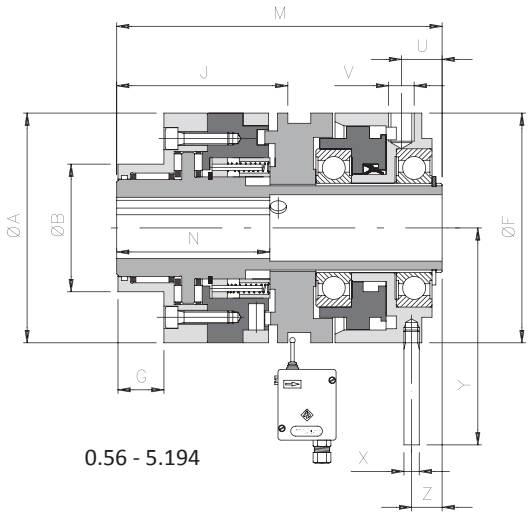

0.56 - 5.194

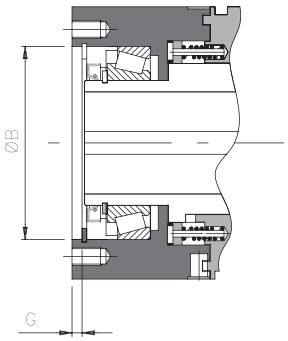

6.240 - 7.280

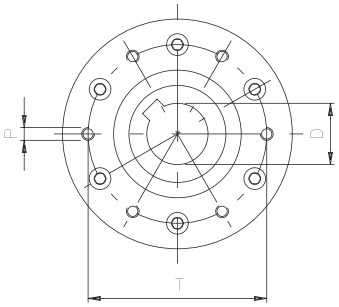

DIMENSIONS

Size	A	Standard flange				D H7	F	J	M	N	U	V	Z	X	Y	Inertia [Kgm²]		Max speed [Rpm]	Weight [Kg]
		B h7	G	P	T	max										Flange side	Cilinder side		
0.56	56	38	10	M5	48	18	56	56	97	45	11,5	1/8”	7,5	6	63	0,000152	0,000301	11000	1,5
1.90	90	50	18	M5	70	25	90	67,5	127,5	60	15	1/4”	11	6	80	0,001791	0,002622	7000	5
2.110	110	60	20	M6	89	38	110	85	147,5	70	17,5	1/4”	13,5	8	105	0,005122	0,006831	5000	9
3.130	130	80	19	M8	105	45	130	90,5	160	100	18,5	1/4”	14,5	8	115	0,010921	0,014132	4300	13,3
4.160	160	100	22	M10	125	55	160	109	191,5	115	25	1/4”	17	10	146	0,030883	0,030793	3600	19
5.194	194	120	26	M12	155	65	215	125	201,5	145	30	1/4”	22	12	184	0,059572	0,093061	3200	35,8
▲ **6.240 CB**	240			M16	200	90	290		306,5										
▲ **6.240 CA**	240			M16	200	90	290		356,5										
▲ **7.280 CB**	280			M20	230	120	345		320										
▲ **7.280 CA**	280			M20	230	120	345		375										

TECHNICAL DETAILS

Size	Torque [Nm]	Torque transmission [Nm] according to the pressure [bar]							
		1	**2**	**3**	**4**	**5**	**6**	**10**	**15**
0.56	7 - 70	7	11	16	20	24	29	45	70
1.90	15 - 280	15	35	55	75	95	115	185	280
2.110	20 - 480	20	50	85	125	160	195	330	480
3.130	25 - 780	25	80	135	195	250	310	520	780
4.160	55 - 1335	55	150	245	340	435	530	900	1335
5.194	330 - 3970	330	550	830	1085	1340	1600	2600	3970
▲ **6.240 CB**	1100 - 5800	1100	2000	3000	3900	4800	5800	-	-
▲ **6.240 CA**	3400 - 15000	3400	6200	9040	11760	15000	-	-	-
▲ **7.280 CB**	1500 - 7500	1500	2500	3700	5000	6200	7500	-	-
▲ **7.280 CA**	7000 - 30000	5000	10000	15000	20000	25000	30000	-	-

▲ On request

NOTES

- Weights are relevant only to the pilot bore (DSR/F/AP), inertias refer to the connection (DSR/F/AP) hole max.
- Microswitches EM1 or EM2 and inductive sensor PRX see page 73

HEXELUS
ComInTec®

... + GEC - model with compact elastic coupling: technical data

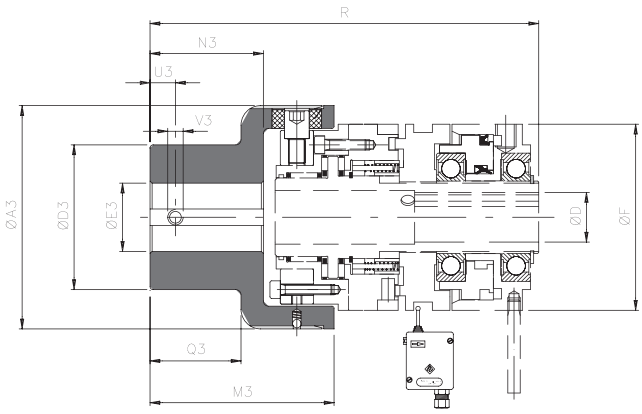

DIMENSIONS

Size		Torque *[Nm]*		A3	D3	E3 H7		M3	N3	U3	V3	Q3	D H7	F	R	U3	V3
DSR/F/AP	GEC	Nom	Max			pilot bore	max						max				
0.56	0	70	110	78	50	10	28	63,5	32	10	M5	28	18	56	142	10	M5
1.90	1	280	420	108	70	12	38	89	49	12	M6	44	25	90	189	12	M6
2.110	2	570	860	130	80	15	45	111	65	15	M8	59	38	110	228	15	M8
3.130	3	980	1500	161	100	15	60	140	85	15	M8	77	45	130	268	15	M8
4.160	4	2340	3600	206	120	20	70	168	105	20	M10	97	55	160	323	20	M10
5.194	5	3880	5800	239	135	30	80	201	130	20	M10	120	65	215	360	20	M10
▲ **6.240 CB**	6	15000	20000														
▲ **6.240 CA**																	
▲ **7.280 CB**	7	30000	35000														
▲ **7.280 CA**																	

TECHNICAL DETAILS

Size		Misalignments						Max speed *[Rpm]*	Weight *[Kg]*
DSR/F/AP	GEC	Angular α *[°]*		Axial X *[mm]*		Radial K *[mm]*			
		continuous	intermittent	continuous	intermittent	continuous	intermittent		
0.56	0	1°	1° 30′	± 0,7	± 1,5	0,5	0,7	5500	1,1
1.90	1	0° 48′	1°	± 0,7	± 1,5	0,5	0,7	5000	3,3
2.110	2	0° 36′	0° 48′	± 0,7	± 1,5	0,6	0,7	4500	5,9
3.130	3	0° 30′	0° 42′	± 0,8	± 1,6	0,6	0,8	4000	10,9
4.160	4	0° 24′	0° 30′	± 0,8	± 1,6	0,6	0,8	3100	19,8
5.194	5	0° 24′	0° 30′	± 0,8	± 1,6	0,6	0,8	2800	30,5
▲ **6.240**	6	0° 24′	0° 30′	± 0,8	± 1,6	0,6	0,8	-	-
▲ **7.280**	7	0° 24′	0° 30′	± 0,8	± 1,6	0,6	0,8	-	-

OTHER COUPLING MODELS ON REQUEST

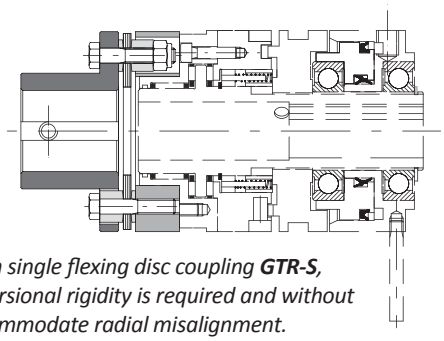

*Model **DSR/F/AP** with single flexing disc coupling **GTR-S**, for applications where torsional rigidity is required and without the ability to accommodate radial misalignment.*

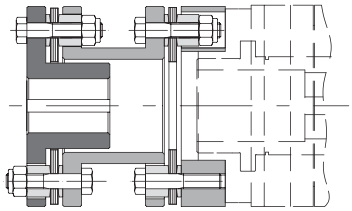

*Model **DSR/F/AP** with double flexing torsionally rigid metal disc coupling **GTR-D**, when torsional rigidity is required and ability to accommodate radial misalignment.*

NOTES

▲ On request

- These details refer only for the coupling (GEC); for connection details see on page 67.
- Weights are relevant only to the pilot bore (GEC).
- Microswitches EM1 or EM2 and inductive sensor PRX see page 73

ComInTec®
HEXELUS

DSF/TF/AP - friction pneumatic clutch: technical data

- Friction torque transmission.
- As tensioner, brake and torque limiter (safety coupling).
- Constant adjustment of the calibration torque.
- Available with special friction rings for specific requirements.
- Available in version to stop the transmission after an overload: .../SI.
- Torque range: 3 – 875 Nm; max. bore ø 65 mm.

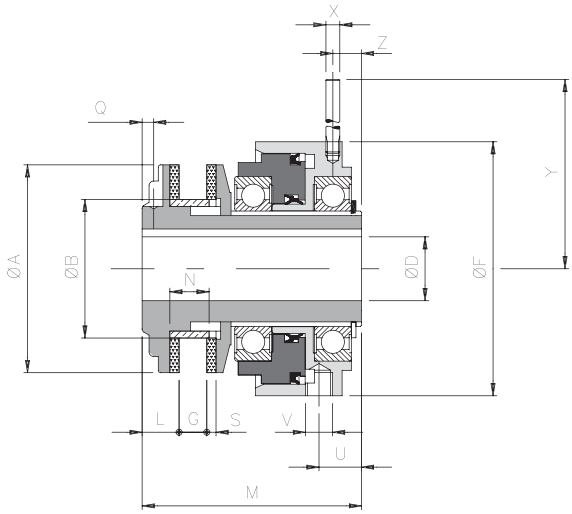

DIMENSIONS AND TECHNICAL DETAILS

Size	A	B h7	D H7 max	F	G min	G max	L	M	N	On request Q	S	U	V	Z	X	Y	Inertia [Kgm²]	Max speed [Rpm]	Weight [Kg]
0.50	50	36	19*	56	3,5	6	11	62	10	3,5 - M4	3	11	1/8”	7	6	58	0,000065	7600	0,7
1.70	70	45	25	90	5	10	15	85	15	4,5 - M4	4	14,5	1/4”	10,5	6	80	0,000332	5450	2,4
2.90	90	60	38	110	7	12	16	95	17	5 - M6	4	17,5	1/4”	13,5	8	105	0,001024	4250	4,3
3.115	115	72	45	130	9	16	18	113	21	5 - M6	4	18,5	1/4”	14,5	8	115	0,004192	3350	7,0
4.140	140	85	55	160	11	19	20	128	25	6 - M6	5	24,5	1/4”	17	10	146	0,008521	2750	11,9
5.170	170	98	65	215	15	22	22,5	139,5	28	6,5 - M8	5	26,5	1/4”	18	12	184	0,019153	2250	19,8

TORQUE TRANSMISSION

Size	Torque [Nm]	Torque transmission [Nm] in according to pressure [bar]						
		1	**2**	**3**	**4**	**5**	**6**	**10**
0.50	3 - 20	3	5	7	9	11	13	20
1.70	6 - 70	6	10	19	28	36	43	70
2.90	15 - 135	15	27	42	57	73	88	135
3.115	25 - 220	25	52	79	105	130	153	220
4.140	70 - 330	70	115	145	175	205	230	330
5.170	170 - 875	170	280	390	500	600	700	875

NOTES

- **DH7*:** with reduced keyway UNI7510.
- Weights are relevant only to the connection (DSF/TF/AP), inertias refer to the connection (DSF/TF/AP) hole max.

HEXELUS
ComInTec®

.../TAC - version with chain coupling: technical data

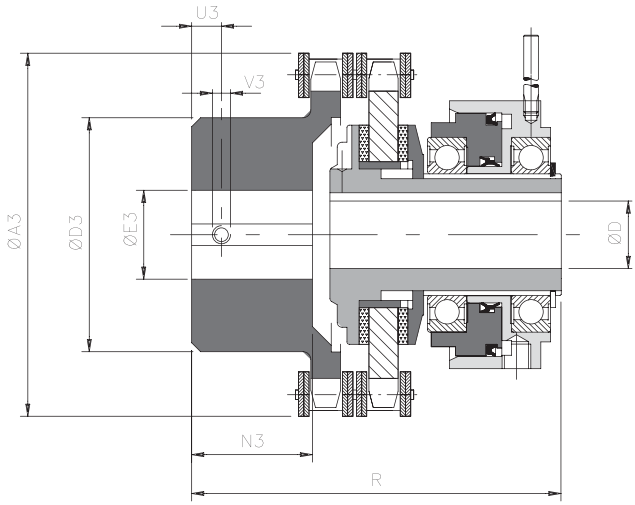

DIMENSIONS

Size	Torque *[Nm]*	A3	D3	E3 H7		N3	D H7 max	F	R	U3	V3	Max speed *[Rpm]*	Weight *[Kg]*
				pilot bore	max								
0.50	3 - 20	75	50	12	28	19	19	56	84	8	M4	7600	0,6
1.70	6 - 70	101	70	16	38	29	25	90	117	8	M4	5450	1,7
2.90	15 - 135	126	89	20	55	38	38	110	138	12	M6	4250	4,1
3.115	25 - 220	159	112	20	70	56,5	45	130	174	12	M6	3350	7,1
4.140	70 - 330	184	130	28	80	59	55	160	193,5	15	M8	2750	14,1
5.170	170 - 875	216	130	30	80	88	65	215	233	15	M8	2250	19,2

OTHER COUPLING MODELS

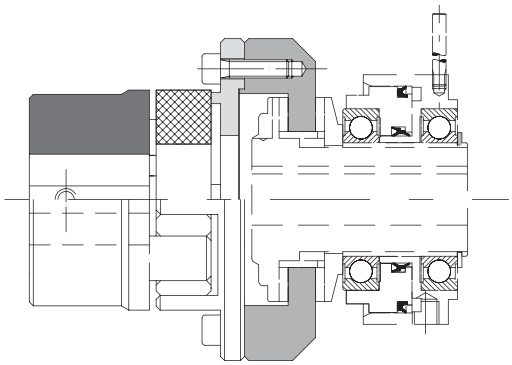

*Model **DSF/TF/AP** with elastic jaw coupling **GAS** to accomodate high misalignments.*

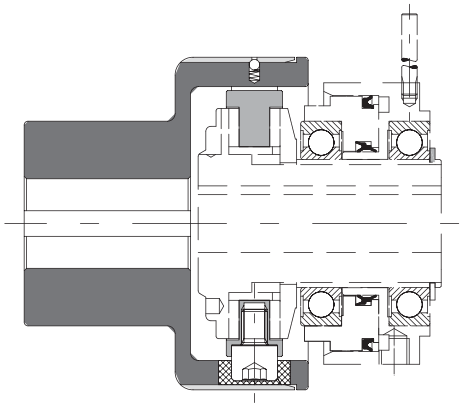

*Model **DSF/TF/AP** with compact elastic coupling **GEC** for simple maintenance without removing the coupling.*

NOTES

- Data is relevant to the whole assembly (DSF/TF/AP/TAC).
- Weights are relevant only to the pilot bore (DSF/TF/AP/TAC).

AP - pneumatic clutch: versions on request

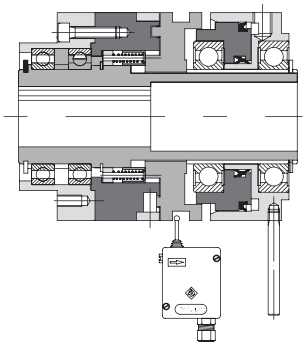

DSR/F/AP/CS

Version with ball bearings as an alternative to the rollers.
Suitable for long rotation on disengagement.

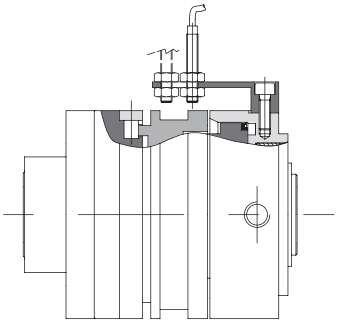

.../PRX

Version with proximity inductive sensor PRX M8x1, integrated into the DSR/F/AP. Compact and versatile solution, without adding equipment and/or external components.

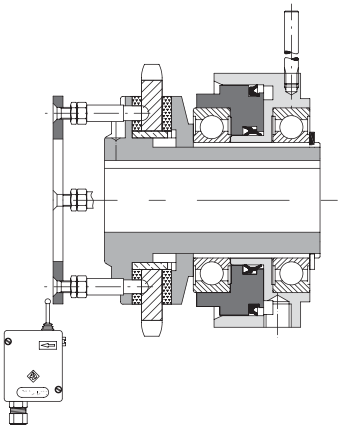

DSF/TF/AP/SI

Friction clutch with intervention signal and further automatic re-engagement. This characteristic requires particular machining on the drive element, which has to be supplied together with the torque limiter.

AP - pneumatic clutch: additional information

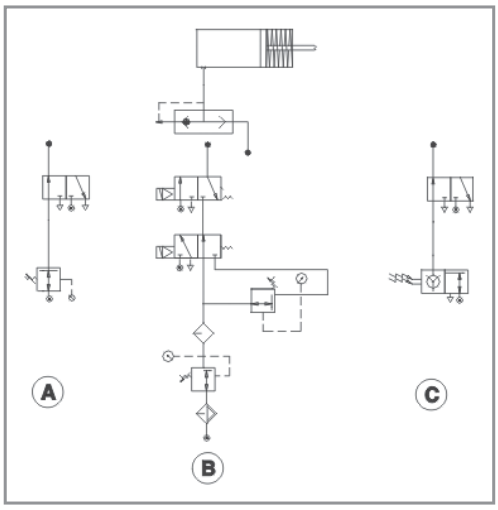

EXAMPLE CIRCUIT CONNECTION TYRE

The pneumatic clutch are designed for the connection of pneumatic circuit with connection type *"GAS"*.
Some examples for the control to the pressure are shown here:

A) Adjustable pressure with pressure regulator.

B) Control of two pressures using solenoid valves.

C) Control of variable pressure by PLC.

AP - pneumatic clutch: additional information

ORDER EXAMPLE

TORQUE LIMITER				
Size	Model	.../Version	● Finished bore	Torque
0.56	**DSR/F/AP**	**-**	**ø15 H7**	**20 Nm**

+

DRIVE ELEMENT
Descrizione
Plate wheel 1/2" Z16

COUPLING		
Model	Finished bore	Locking type
GEC	**ø38 H7**	**A1**

Size
from 0.56 to 7.280
from 0.50 to 5.170

.../Version	
-	base version
.../TAC	with chain coupling (only DSF/TF/AP)
.../CS	with ball bearing (only DSR/F/AP)
.../PRX	with proximity inductive sensor (only DSR/F/AP)
.../SI	with intervention signal (only DSF/TF/AP)

Model	
GEC	compact elastic coupling

Model	
DSR/F/AP	Roller phase pneumatic clutch
DSF/TF/AP	Friction pneumatic clutch

Locking type
See hub connection type list on page 4

- Both models available only with finished bores.

ComInTec®
HEXELUS

EM - electromechanical switch: technical data

- Protection level IP57 DIN 40050.
- Adjustment of the lever end position possible.
- Die-cast aluminium box.
- Operation temperature range from -10°C to +85°C.
- Three different options of voltage input with 1 or 2 contacts available.
- Initial stroke 0,7 mm, Extra stroke: 4 ÷ 8 mm depending on setting (possible in a range of 6 mm).

1 CONTACT

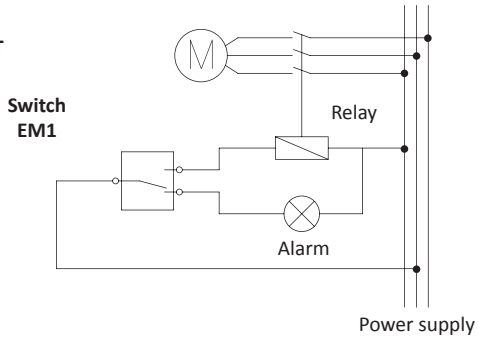

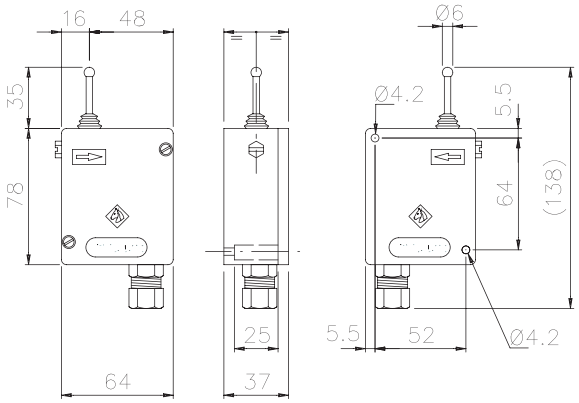

Weight: 350g

2 CONTACTS

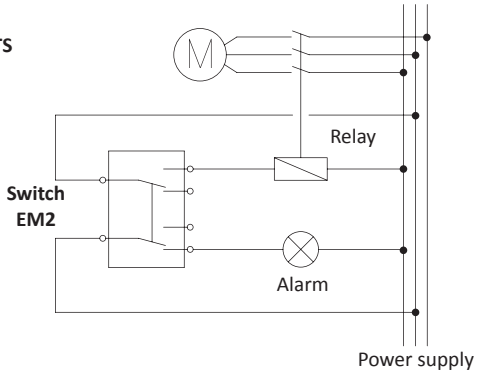

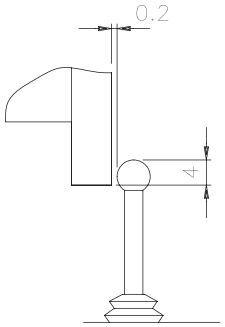

PRX - inductive proximity sensor: technical data

- Standard version: Brass cover with protection level IP67 DIN 40050.
- Electric contact: 5 ÷ 24 VdC. - Frequency: 2000 Hz.
- Output: NPN (N.O.-N.C.) – PNP (N.O.-N.C.).
- Operating distance: max 1 mm.
- Cable length: 2 m (3x0,2).

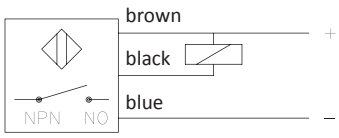

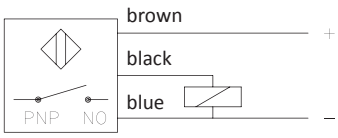

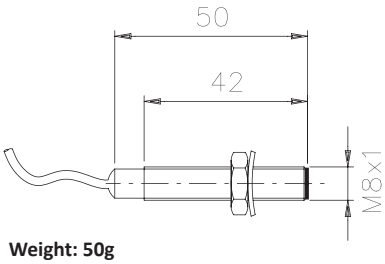

Weight: 50g

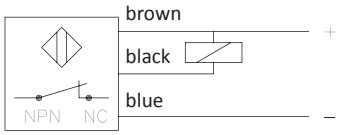

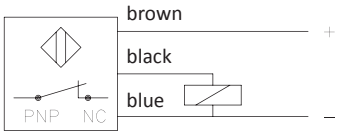

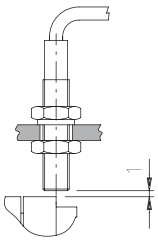

HEXELUS
ComInTec®

CALIBRATION SYSTEM WITH "H" DIMENSION

The transmitted force of a torque limiter can be determined with one or more axial springs and different forces, depending on how they are combined. Efficient controls on all components make it possible to realize tables for simple, easy and most of all, quick torque limiter calibration, without any need of special equipment.
Search in the technical catalogues, in the table "torque calibration" the value that is closest to the required torque of the selected torque limiter size and spring combination. Find the related value of "dimension H". Alter the spring pressure by adjusting the ring nut until you reach "dimension H", the distance between nut ring and flange (see drawings). Finally, fix the nut ring by its locking mechanism. With this calibration system you obtain:

- Torque calibration without removing the torque limiter.
- Quick torque calibration.
- Avoid calculating and reading errors due to misinterpretation of drawings.
- Simple variation or reset of the torque.

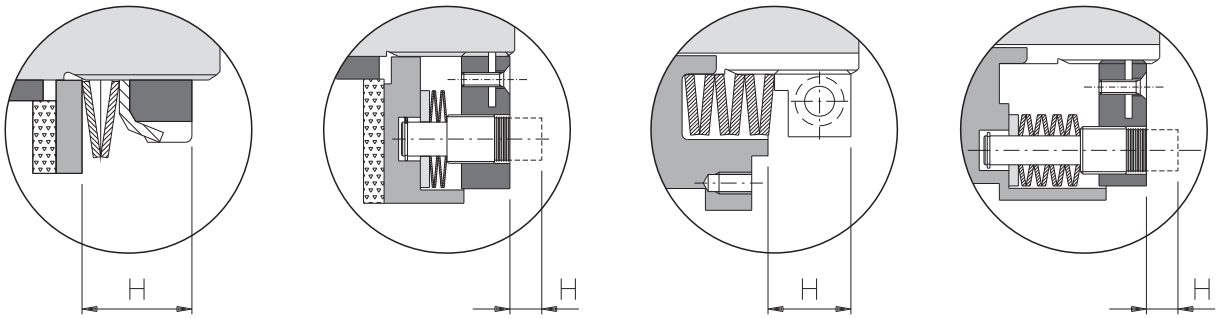

EXAMPLES OF DETERMINING, REGULATING AND CALIBRATING A TORQUE LIMITER

Electric motor: power = 7,5 Kw
Rpm = 1450
f (safety factor) = 1,5

Use the following formula to get an idea of the intervention torque:

$$C = \frac{Kw \cdot f \cdot 9550}{Rpm} = \frac{7{,}5 \cdot 1{,}5 \cdot 9550}{1450} = 74 \text{ Nm}$$

Find in the technical catalogue (in this case DF) the required spring combination and the relative dimension H for the selected torque limiter (in this case 2.90 DF), to have the desired torque (in this case springset T0 - dimension H 12,2 mm - torque 74Nm).

Please note: Due to the expansion coefficient and the load loss of all springs in general, the "dimension H" can vary slightly.

Torque range

Spring configuration

Torque limiter size

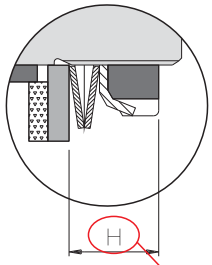

Measure dimension "H"

Torque calibration

Grand. 2.90 [13 ÷ 450] Nm				
H (mm)	T0)	T1)	T2))	T3)))
10,6				
11	105			
11,4	99	140		
11,8	89	124		
12,2	74	101		
12,6	49	74		
13	13	40		
13,4			280	
13,8			256	
14,2			213	
14,6			158	
15			90	
15,4				450
15,8				415
16,2				353
16,6				276
17				185

You can find all the calibration torque values by typing in "dimension H" on our website "www.comintec.it".

LABEL

The Company ComInTec uses a plastic label with indelibly printed information necessary to identify all product groups and production history. This information is also useful to order spare parts, repeat orders and to get product information.
Explanation of the data:

Example:

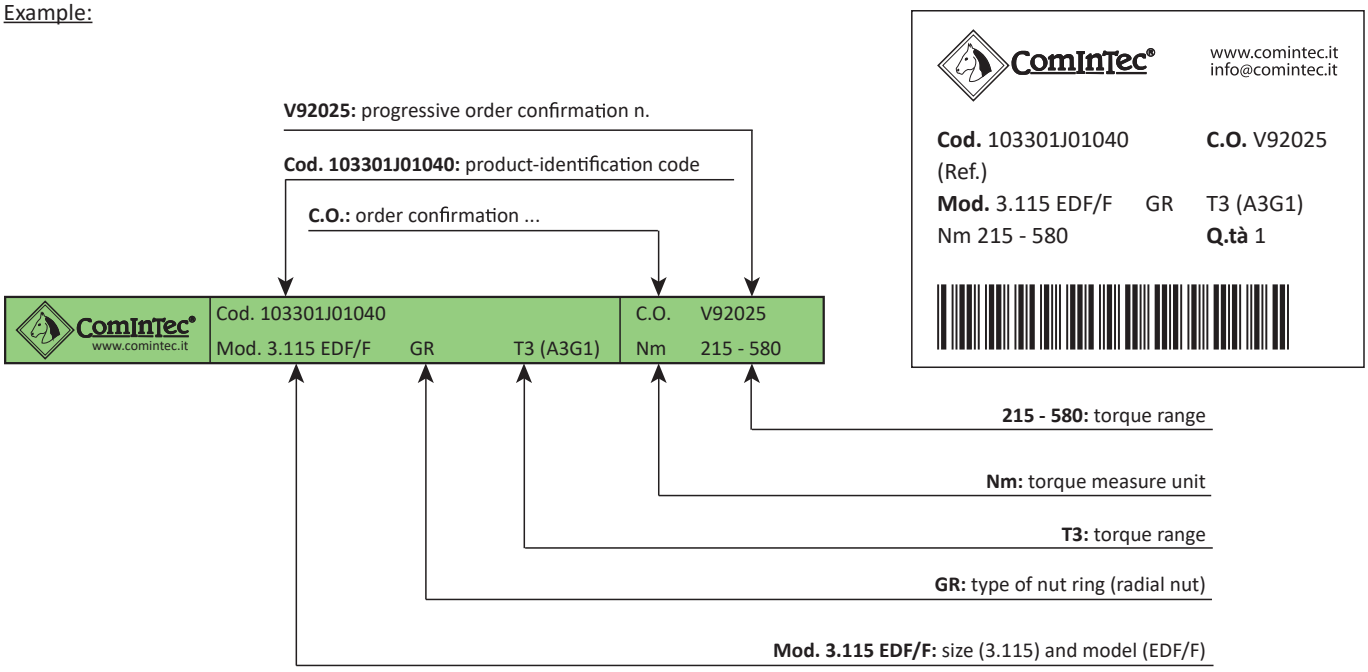

MARKING

Example:

ComInTec® CERTIFICATIONS

- **UNI EN ISO 9001:2015** certified company since February 1996
- Internal and external environment protection complying with directive, **2011/65/UE (RoHS)**, that forbids the use of harmful substances during the production process or in the endproduct, and complying with D.Lgs. 81/08 for security and health at work.
- Company and production **"Made in Italy"**.
- Maximum attention to market requests for conformity with 94/9/CE (ATEX) for use in potentially explosive environments.
- **ABS** Certification for the use in the Naval industry.
- European Power Transmission Distributors Association (EPTDA). The largest organisation of distributors and manufacturers of power transmission and motion control products in Europe.
- Continuous product-research and development, some of them with Italian and European **PATENT.**
- REACH compliance (CE) n. 1907/2006

Your needs are our priorities.

If you need help for a product design, contact ComInTec experts for assistance and advice. It helps to fill in this form.
Your request will be handled in the shortest time possible.

General information:

- Company name: _
- City / State: _
- Name / Surname: _
- Title: _
- Phone: _
- E-mail / website: _
- Quantity: _
- Planned yearly quantities: _
- Target price: _

Use:

- OEM name / website: _____
- Application field / type of machine: _____
- Where it's applied and what it protects: _____
- Model currently used: _____
- Nominal torque (Nm): _____
- Speed (Rpm): _____
- Workplace:
  - ☐ Clean
  - ☐ Dusty
  - ☐ Humid / Wet
  - ☐ Other _____
- Re-engagement position:
  - ☐ Equidistant
  - ☐ 360°
  - ☐ Not important
  - ☐ Other _____

- Electric signal of overload required:
  - ☐ Yes
  - ☐ No
- Trasmission:
  - ☐ Parallel
  - ☐ In line
- Driving shaft diameter (mm): _____
- Driving shaft connection type:
  - ☐ Keyway
  - ☐ Locking assembly
  - ☐ Spline (specification _____)
  - ☐ Other _____
- Type of drive component e.g sproket, gear etc. (PARALLEL TRANSMISSION): _____

EVENTUAL ASSEMBLY WITH COUPLINGS (IN LINE TRANSMISSION)

- Type of coupling (in line transmission): _____
- Driven shaft diameter (mm): _____
- Driven shaft connection type:
  - ☐ Keyway
  - ☐ Locking assembly
  - ☐ Spline (specification _____)
  - ☐ Other _____
- Notes: _____

_____

_____

☐ Autorization D.lgs. 196/2003

Signature

_ _

PLEASE ALSO SEND, IF AVAILABLE, A DRAWING OR PHOTOGRAPH. IT CAN ASSIST US ENORMOUSLY IN HELPING US TO FULLY UNDERSTAND YOUR APPLICATION.

NOTES

NOTES: on all groups is not always guaranteed the respect of the phase between the keyway and the connection holes.
In general for fixing screws/bolts supplied by ComInTec please observe the data provided in the catalogues or instruction sheets respect correct tightening torques, for those not supplied (or not indicated) please respect the general mechanical data available based on the grades used.

ComInTec Srl reserves the right to discontinue the production of any model and / or change specifications or dimensions at any time without notice and without obligations.
The data reported in this catalog are indicative and not binding.
The torque values listed in the catalog refer to static tests performed under “normal condition”.
These values may be subject to change, depending on the parameters of work and environmental conditions.

This catalogue supersedes all previous.

PRODUCTION PROGRAM

Made in Italy

TORQUE LIMITERS
(safety couplings)

CLUTCHES

FLEXIBLE COUPLINGS - RIGID COUPLINGS
(backlash free)

LOCKING RINGS

VARIABLE PULLEYS - MOTOR SLIDE BASES

Sold Exclusively in North America by:

HEXELUS

30 Wilson Drive,
Suite B
Sparta, NJ 07871
info@hexelus.com
(973) 864-4548

ComInTec®

ComInTec srl - Via Dell'Artigiano, 9 - 40055 Villanova di Castenaso (Bologna) - Tel. +39 051 780216 - Fax +39 051 782256 - info@comintec.it - www.comintec.it

www.comintec.it

Edition 01/2015